Chapter 225
Zoning

Article I Authority and Purpose **1**
§225-101. Title. 1
§225-102. Authority. 1
§225-103. Policy, Goals and Community Development Objectives. 1
§225-104. Interpretation. 1
§225-105. Applicability. 1
§225-106. Severability. 2
§225-107. How to Use this Ordinance. 2
Article II Form and Function **4**
§225-201. Types of Zoning Districts and Overlays. 4
§225-202. Zoning Map and Overlay Zoning Maps. 4
§225-203. Boundaries of Zoning Districts and Overlays; Interpretation. 4
§225-204. Authentication of Zoning Map. 4
§225-205. Permitted Uses. 4
§225-206. Dimensional Criteria. ..... 12~~10~~
Article III Zoning Districts and Overlays ..... 20~~18~~
§225-301. District Overview. ..... 20~~18~~
§225-302. Zoning Overlay Overview and Purposes. ..... 21~~19~~
§225-303. Conservation. ..... 29~~25~~
§225 304. R-1 Larger Lot, Single-Family Residential. ..... 30~~26~~
§225-305. R-2 Small Lot, Single-Family Residential. ..... 30~~26~~
§225-306. R-3 Small Lot, Mixed Residential. ..... 32~~28~~7
§225-307. General Commercial ..... 33~~29~~8
§225-308. Planned Campus North 29
§225-309. Planned Campus South. ..... 36~~31~~0
§225-310. Planned Campus West. ..... 37~~32~~1
§225-311. Medical Campus Central ..... 39~~33~~2
§225-312. Commercial Recreation. ..... 41~~34~~3
§225-313. Commercial Golf. ..... 42~~35~~4
§225-314. Palmdale Mixed Use. ..... 43~~36~~5
§225-315. Hershey Mixed Use. ..... 44~~37~~6
§225-316. Limited Compatibility. ..... 46~~38~~7
§225-317. Industrial. ..... 47~~38~~
Article IV Performance Standards and Supplementary Regulations ..... 49~~39~~
§225-401. Overlay Criteria. ..... 49~~39~~
§225-402. Parking. ..... 107~~84~~
§225-403. Landscaping. ..... 124~~94~~

§225-404. Keeping of Animals as an Accessory, Noncommercial Use. ..... 126~~95~~
§225-405. Temporary Construction Building or Trailer. ..... 127~~97~~
§225-406. Temporary Real Estate Sales Offices. ..... 127~~97~~
§225-407. Fences 97
§225-408. Reserved. 99
§225-409. Certain Uses to be Served by Public Water and Sewer. ..... 129~~99~~
§225-410. Unenclosed Storage. ..... 129~~99~~
§225-411. Subsurface or Overhead Buildings or Structures in Yard Areas. ..... 130~~100~~
§225-412. Satellite Antennae. ..... 130~~100~~
§225-413. Retail Sales of Agricultural Products Grown on Site. ..... 131~~101~~
§225-414. Garage Sales. ..... 131~~101~~
§225-415. Outdoor Storage of Recreational Activity Vehicles and Utility Vehicles. ..... 132~~102~~
§225-416. Use of Searchlights for Promotional Purposes. ..... 132~~102~~
§225-417. Access Areas for Fire Apparatus. ..... 132~~102~~
§225-418. Special Provisions for Occupied Buildings Greater than 95 Feet in Height. ..... 132~~102~~
§225-419. Special Conditions for No Impact Home-Based Businesses and Home Occupations in Certain Districts. ..... 134~~103~~
§225-420. Communications antennas, communications ancillary equipment, and communications towers. ..... 135~~104~~
§225-421. Outdoor Lighting Design Standards. ..... 150~~112~~
§225-422. Murals/Street Art. ..... 152~~113~~
§225-423. Alternative Energy Sources. ..... 152~~114~~
§225-424. Businesses Containing Drive-through Service. ..... 153~~114~~
§225-425. Amusement Park Ride Height Exception. ..... 153~~115~~
§225-426. Performance Standards for Nonresidential Uses Permitted in the HMU and PMU Zoning Districts. 116
§225-427. Performance Standards for Nonresidential Uses Permitted in the Conservation Zoning District. 117
Article V Conditional Uses and Special Exceptions ..... 155~~117~~
§225-501 Specific Criteria For Conditional Uses ..... 155~~117~~
§225-502. Specific Criteria For Special Exception Uses. ..... 206~~165~~
Article VI Nonconformity Regulations ..... 216~~173~~
§225-601 Continuance of Nonconformities. ..... 216~~173~~
§225-602 Expansion or Alteration of Nonconforming Uses of Land, Buildings or Structures. 216~~173~~
§225-603 Substitution of Nonconforming Uses. ..... 217~~174~~
§225-604 Restoration of Nonconforming Buildings, Structures and Land Use. ..... 218~~174~~
§225-605 Reversion of Nonconformity. ..... 218~~174~~
§225-606 Certain Existing Uses Declared Nonconforming Uses. ..... 218~~174~~
§225-607 Nonconforming Signs. ..... 218~~175~~
Article VII Rezoning ..... 219~~176~~

Article VIII Permits 221178

§225-801 Application for Zoning Permits, Building Permits or Certificates of Use and Occupancy. 221178

§225-802 Permits. 221178

§225-803 Conditions of Permit. 226183

§225-804 Records. 226183

§225-805 Certificate of Use and Occupancy. 227184

Article IX Amendments 228185

§225-901 Enactment of Zoning Ordinance Amendments. 228185

§225-902 Landowner Curative Amendments. 228185

§225-903 Township Curative Amendments. 228185

§225-904 Enactment, Publication, Advertisement and Availability of Ordinances. 228185

Article X Administration and Enforcement 229186

§225-1001 Appointment and Powers of Zoning Officer. 229186

§225-1002 Enforcement. 229186

§225-1003 Conflicting Regulations and Interpretation of Provisions. 229186

§225-1004 Enforcement Notice. 229186

§225-1005 Causes of Action. 230187

§225-1006 Violations and Penalties. 230187

§225-1007 Township Zoning Hearing Board. 231188

Article XI Definitions 237194

§225-1101 Word Usage 237194

§225-1102 Language Interpretation. 237194

§225-1103 Definitions. 237194

Zoning Map amendments.(reserved) 271227111111224444441220202121232324282929317338340935041136237338439540642743402454024540246402474024740248402534025455555565640157401574015740157401584015840159401594015940160401604016040161401614016240163401644016540167401684017440177401794018040 1.492401.492401.492401.493401.494401.496401.4113401.4113401.4113401.4113114116116116117117118119119120120120121121231301321321331341341351351361361391401401401401431431431441451451451461471471481491501501501511511521521521531541551561571581581591591601611611631661671681681681711711821821831831841851861861861861861881881881891891891901901901901911911931931931981981992002002002002002012012012012012022022032032032032042042042042052052062062062062062082082082082092102142162172262302352402 40Article I Authority and Purpose 11

§225-101 Title. 11

§225-102 Authority. 1

§225-103 Policy, Goals and Community Development Objectives. 11

§225-104 Interpretation. 11

§225-105 Applicability. 11

§225-106 Severability. 2

§225-107 How to Use this Ordinance. 2
Article II Form and Function 4
§225-201 Types of Zoning Districts and Overlays. 44
§225-202 Zoning Map and Overlay Zoning Map. 44
§225-203 Boundaries of Zoning Districts and Overlays; Interpretation. 44
§225-204 Authentication of Zoning Map. 44
§225-205 Principal and Accessory Uses. 44
§225-206 Dimensional Criteria. 1211
Article III Zoning Districts and Overlays 2019
§225-301. District Overview. 2019
§225-302 Zoning Overlay Overview and Purposes. 2120
§225-302.1 Thoroughfares. 2120
§225-302.2 Environment. 2221
§225-302.3 Development Approval Areas. 2322
§225-302.4 Signage 2422
§225-303 Conservation. 2827
§225-304 R-1 Larger Lot, Single-Family Residential. 2928
§225-305 R-2 Small Lot, Single-Family Residential. 2928
§225-306 R-3 Small Lot, Mixed Residential. 3130
§225-307 Business Office 3231
§225-308 General Commercial. 3332
§225-309 Planned Campus North. 3433
§225-310 Planned Campus South. 3534
§225-311 Medical Campus Central 3635
§225-312 Commercial Recreation. 3736
§225-313 Commercial Golf. 3837
§225-314 Palmdale Mixed Use. 3938
§225-315 Hershey Mixed Use. 4039
§225-316 Planned Campus West. 4140
§225-317 Limited Compatibility. 4241
§225-318 Industrial. 4342

Article IV Performance Standards and Supplementary Regulations 4544
§225-401 Parking. 4544

§225-401.1. Vehicular Off-street Parking Standards 4544
§225-401.2 Design and Construction Standards. 4645
§225-401.3 Parking Spaces and Accessibility for Persons with Disabilities. 4746
§225-401.4 Shared Parking. 4746
§225-401.5. Vehicular Parking Ratios 4846
§225-401.6. Off-Street Loading and Unloading Space. 4847
§225-401.7 Bicycle Parking Standards 494847
§225-402 Landscaping. 5049
§225-402.1. Nonresidential Use Landscaped Buffer. 5049
§225-402.2. Community Heritage Landscaped Buffer Area. 5150
§225-402.3. Parking Lot Landscaping. 5150
§225-403 Overlay Criteria. 5250
§225-403.1 Thoroughfares. 5250
§225-403.1.A. Planned Campus West Future Development Area 5250
§225-403.1.B. Derry Road 5251
§225-403.1.C. Palmdale Chocolate Avenue 5251
§225-403.1.D. Governor Road 5251
§225-403.1.E. Hersheypark, ... 5352
§225-403.1.F. Hersheypark Drive/Route 39 5352
§225-403.1.G. Homestead Road/Fishburn Road 5452
§225-403.1.H. Middletown Road 5453
§225-403.1.I. Palmdale Future Development Area. 5553
§225-403.1.J. Route 322/422 5553
§225-403.1.K. Sand Hill Road 5653
§225-403.1.L. Downtown Core 5653
§225-403.2. Environmental Overlays. 5754
§225-403.2.1 Sensitive Environmental Resources 5754
§225-403.2.2 Floodplain Overlay. 5855
§225-403.2.2.A. General Provisions. 5855
§225-403.2.2.B Establishment of District. 5855
§225-403.2.2.C Utilization of District. 6057
§225-403.2.2.D Development Which May Endanger Human Life. 6159
§225-403.2.2.E Design and Construction Standards. 6360
§225-403.2.2.F Criteria for Permits. 6866

§225-403.2.2.G Appeals and Variances. 7269
§ 225-403.2.2.H Warning and Disclaimer of Municipal Liability. 7370
§ 225-403.3 Airport Safety Zone Overlay 7471
§225-403.4 Overlay Development Approval Area process. 7572
§225-403.5. Signage. 8681
§225-403.5.A Purpose and Intent. 8681
§225-403.5.B Permit Required. 8682
§ 225-403.5.C Signs and activities permitted in all districts; permit exceptions. 8783
§225-403.5.D Non-Street Fronting Signs. 8884
§225-403.5.F Special Conditions and Regulations for Signs or Activities Not Requiring Permit. 9085
§225-403.5.G. Highwall Sign. 107100
§225-403.5.H. Neighborhood Identification Signs. (Reserved) 107100
§225-403.5.I. Nonconforming Signs. 107100
§225-403.5.J Commercial Entertainment Identification Signs. 107100
§225-404 Keeping of Animals as an Accessory, Noncommercial Use. 108100
§225-405 Temporary Construction Building or Trailer. 110102
§225-406 Temporary Real Estate Sales Offices. 110102
§225-407 Fences. 110102
§225-408 Permitted Encroachments in Required Yard Areas.Moved to 225-206.H ..... **Error! Bookmark not defined.**
§225-409 Certain Uses to be Served by Public Water and Sewer. 111104
§225-410 Unenclosed Storage. 112104
§225-411 Subsurface Buildings or Structures in Yard Areas. 112105
§225-412 Satellite Antennae. 113105
§225-413 Retail Sales of Agricultural Products Grown on Site. 114106
§225-414 Garage Sales. 114106
§225-415 Outdoor Storage of Recreational Activity Vehicles and Utility Vehicles. 114107
§225-416 Use of Searchlights for Promotional Purposes. 114107
§225-417 Special Provisions for Occupied Buildings Greater than 95 Feet in Height. 115107
§225-418 Special Conditions for No Impact Home-Based Businesses and Home Occupations in Certain Districts. 116108
§225-419 Communications antennas, communications ancillary equipment, and communications towers. 117109
§225-420 Outdoor Lighting Design Standards. 124116

§225-421 Murals. 1261189
§225-422 Alternative Energy Sources. 119
§225-423 Businesses Containing Drive-through Service. 120

Article V Conditional Uses and Special Exceptions 129120
§225-501 Specific Criteria For Conditional Uses 129120
§225-501.1 Single Family Conversion. 130121
§225-501.2 Multifamily Apartment Dwelling. 130121
§225-501.3 Bed and Breakfast Home. 131122
§225-501.4 Reserved. 131122
§225-501.5 Mobile Home Park. 131122
§225-501.6 Automotive Car Wash/Lubrication Facilities. 134125
§225-501.7 Cigar, Hookah, and/or Vapor Lounge 135126
§225-501.8 Commercial Parking Lot or Structure 135126
§225-501.9 Food Service Without Drive Through 135126
§225-501.10 Winery 135126
§225-501.11 Food Catering 138129
§225-501.12 Guest Lodging, Dining and Conference Facilities. 138129
§225-501.13 (Reserved). 139130
§225-501.14 Heliport. 139130
§225-501.15 Landscaping & Garden Center – Non-retail/ Retail 140131
§225-501.16 Membership Club 140131
§225-501.17 (Reserved) 140131
§225-501.18 Private Parking Lot or Structure 141131
§225-501.19 Fuel Service – Minor/Major 141131
§225-501.20 Specialty Home 142132
§225-501.21 Recreational, Sports & Entertainment Facilities - Arboretums & Botanical Gardens 142132
§225-501.22 Recreational, Sports & Entertainment Facilities - Archery & Shooting Ranges, Indoor 143133
§225-501.23 Recreational, Sports & Entertainment Facilities - Archery and/or Shooting Ranges, Outdoor 144134
§225-501.24 Recreational, Sports & Entertainment Facilities - Bowling Alleys 145135
§225-501.25 Recreational, Sports & Entertainment Facilities - Casinos and Gambling Facilities 145135
§225-501.26 Recreational, Sports & Entertainment Facilities - Country Club 145135

§225-501.27 Recreational, Sports & Entertainment Facilities - Golf Courses.....146136
§225-501.28 Recreational, Sports & Entertainment Facilities - Zoos.....146136
§225-501.29 Retail, Large-scale.....147137
§225-501.30 Taxidermy.....147137
§225-501.31 Manufacturing.....147137
§225-501.31 Mineral Extraction Activities.....148137
§225-501.32 Truck Terminals.....149139
§225-501.33 Waste Management Facilities.....150139
§225-501.34 Life Care Facilities and Skilled Nursing Home.....151141
§225-501.35 Group Home for Persons with Disabilities or without Disabilities.....152142
§225-501.36 Research/Technology Business Incubator.....153143
§225-501.37 Recycling Center.....153143
§225-501.38 Sewage Treatment Plants.....154144
§225-501.39 Sexually Oriented Business.....154144
§225-501.40 Uses Similar to Specified Permitted Uses.....155145
§225-501.41 Billboard Signs.....156146
§225-501.42 Shared Parking.....156146
§225-501.43 Cluster Development Option.....158148
§225-501.44 Unique Buildings (to be added to use table in all districts).....162151
§225-501.45 Affordable Housing Density Incentive Option.....162152
§225-501.46 Administrative Offices Of County, State or Federal Government (Office).163153
§225-501.47 Mixed Use Building.....164153
§225-501.48 Visitor Center.....164153
§225-501.49 Funeral Home.
§225-501.50 Hotels/Motels and Residence Hotels/Motels.
§225-501.51 Retail, Small-scale.
§225-501.52 Group Child Care Facility.
§225-501.53 Other Scientific Research, Development and Training Facilities.
§225-501.54 Incinerators and Crematoriums.
§225-501.55 Highwall Signs.
§225-501.56 Landmark Signs.
§225-502 Specific Criteria For Special Exception Uses.....178156
§225-502.1 Bed & Breakfast Home.....179156
§225-502.2 Farm Home Occupations.....179156
§225-502.3 Family Child Care Home.....180157

§225-502.4 Campgrounds. 181158
§225-502.5 Communication Antenna, Towers >50 feet in height 182159
§225-502.6 Conference & Meeting Centers 183160
§225-502.7 Guest Lodging, Dining & Conference Facilities 183160
§225-502.8 Membership Clubs. 183160
§225-502.9 Amusement Park Ride Height Exception. 183160
§225-502.10 Accessory Dwelling Units. 184161
§225-502.11 Sign Area Relief.

Article VI Nonconformity Regulations **187163**
§225-601 Continuance of Nonconformities. 187163
§225-602 Expansion or Alteration of Nonconforming Uses of Land, Buildings or Structures. 187163
§225-603 Substitution of Nonconforming Uses. 188164
§225-604 Restoration of Nonconforming Buildings, Structures and Land Use. 189164
§225-605 Reversion of Nonconformity. 189164
§225-606 Certain Existing Uses Declared Nonconforming Uses. 189164
§225-607 Nonconforming Signs. 189164
Article VII Rezoning **189165**
Article VIII Permits **192167**
§225-801 Application for Zoning Permits, Building Permits or Certificates of Use and Occupancy. 192167
§225-802 Permits. 192167
§225-803 Conditions of Permit. 197172
§225-804 Records. 197172
§225-805 Certificate of Use and Occupancy. 198173
Article IX Amendments **199174**
§225-901 Enactment of Zoning Ordinance Amendments. 199174
§225-902 Landowner Curative Amendments. 199174
§225-903 Township Curative Amendments. 199174
§225-904 Enactment, Publication, Advertisement and Availability of Ordinances. 199174
Article X Administration and Enforcement **200175**
§225-1001 Appointment and Powers of Zoning Officer. 200175
§225-1002 Enforcement. 200175
§225-1003 Conflicting Regulations and Interpretation of Provisions. 200175

§225-1004 Enforcement Notice. 200175
§225-1005 Causes of Action. 201176
§225-1006 Violations and Penalties. 201176
§225-1007 Township Zoning Hearing Board. 202177
§225-1007.1 Appeals and Applications to Township Zoning Hearing Board. 202177
§225-1007.2 Membership; Terms; Vacancies. 202177
§225-1007.3 Removal of Members. 202177
§225-1007.4 Organization. 203178
§225-1007.5 Expenditures for Services. 203178
§225-1007.6 Conduct of Hearings. 203178
§225-1007.7 Jurisdiction. 203178
§225-1007.8 Applicability of Judicial Remedies. 204179
§225-1007.9 Variances. 204179
§225-1007.10 Special Exceptions. 205180
§225-1007.11 Parties Appellant before Board. 205180
§225-1007.12 Time Limitations. 205180
§225-1007.13 Stay of Proceedings. 205180
§225-1008 Township Planning Commission creation,administration, powers, duties, procedures, and other functions. 205180
Article XI Definitions. 207182
§225-1101 Word Usage. 207182
§225-1102 Language Interpretation. 207182
§225-1103 Definitions. 207182

Article I
Authority and Purpose

§225-101. Title.

This Chapter shall be known and may be cited as "The Official Zoning Ordinance of the Township of Derry."

§225-102. Authority.

This Chapter is enacted and ordained under the grant of powers by the General Assembly of the Commonwealth of Pennsylvania, the Municipalities Planning Code, 53 P.S. § 10101 et seq.

§225-103. Policy, Goals and Community Development Objectives.

These zoning regulations are enacted for the purpose of promoting and facilitating the public health, safety, morals and the general welfare; coordinated and practical community development and proper density of population; emergency management preparedness and operations; the provision of adequate light and air, access to incident solar energy; police protection; vehicle parking and loading space; reliable sewage facilities, stormwater facilities; recreational facilities and public uses; the provision of a safe, reliable and adequate water supply for domestic, commercial, agricultural, industrial and fire-fighting use; the preservation of natural, scenic and historic values in the environment; the preservation of forests; wetlands; aquifers; and floodplains. Furthermore, this Chapter has been developed to prevent the overcrowding of land, blight, danger and congestion in traveling and transportation; loss of health, life or property from fire, flood, panic and other dangers. This Chapter further strives to accommodate the preservation of prime agricultural and sensitive environmental areas; to provide for the use of land for residential housing of all basic forms; to accommodate reasonable overall community growth; and to provide for opportunities for development of a variety of nonresidential uses. This Chapter has been developed in accordance with the Derry Township 2015 Comprehensive Plan as adopted by the Township Board of Supervisors.

§225-104. Interpretation.

In interpreting and applying this Chapter, its provisions shall be held to be the minimum requirements for promotion of health, safety, morals and general welfare of the Township. This Chapter is not intended to interfere with, abrogate, annul, supersede or cancel, any easements, covenants, restrictions or reservations contained in deeds or other agreements. Any use permitted subject to the regulations prescribed by the provisions of this Chapter shall conform with all regulations for the zoning district in which it is located and with all other pertinent regulations of this and other related ordinances, but that if this Chapter imposes more stringent restrictions upon the use of buildings and land than are elsewhere established, the provisions of this Chapter shall prevail. In interpreting the language of this Chapter, to determine the extent of the restriction upon the use of the property, the language shall be interpreted, where doubt exists as to the intended meaning of the language adopted by the Township Board of Supervisors, in favor of the property owner and against any implied extension of the restriction.

§225-105. Applicability.

A. No building, structure, or land shall hereafter be used or occupied and no building or structure or part thereof shall hereafter be erected, constructed, reconstructed, moved, altered or expanded horizontally or vertically, except in conformity with all regulations contained herein, unless relief is granted by the Township Zoning Hearing Board by granting a special exception or variance.

B. This Chapter shall not apply to an existing or proposed building, or extension thereof, used or to be used by a public utility corporation, if, upon petition of the corporation, the Pennsylvania Public Utility Commission shall, after a public hearing, decide that the present or proposed

situation of the building in question is reasonably necessary for the convenience or welfare of the public. It shall be the responsibility of the Pennsylvania Public Utility Commission to ensure that both the corporation and the Township have notice of the hearing and are granted an opportunity to appear, present witnesses, cross-examine witnesses presented by other parties and otherwise exercise the rights of a party to the proceedings.

§225-106. Severability.

The provisions of this Chapter are severable, and if any section, sentence, clause, part, or provision hereof shall be held to be illegal, invalid, or unconstitutional by any court of competent jurisdiction, such decision of the court shall not affect or impair the remaining sections, sentences, clauses, parts or provisions of this Chapter. It is hereby declared to be the intent of the Board of Supervisors that this chapterChapter would have been enacted if such illegal, invalid, or unconstitutional section, sentence, clause, part, or provision had not been included herein.

§225-107. How to Use this Ordinance.

A. This Zoning Ordinance presents a straight forward set of regulatory provisions related to retaining cohesive form and function of lot development within Derry Townshipthe Township.

B. Many of the Rrequirements for proposed development within Derry Townshipthe Township are summarized on the maps and tables within Article III. These maps and tables include key development relationship pertaining to lot location, land uses and additional development information applicable to Derry Townshipthe Township. As the relationship of buildings and streets is the foundation of the community, the way in which a lot presents its street wall as well as the way in which it is accessed by pedestrians and vehicles alike will enable Derry Townshipthe Township to maintain the development continuity of established development patterns. The other Articles of the Ordinance provide additional provisions related to zoning and land use.

C. To navigate through this Ordinance and determine the zoning parameters for any specific lot situated within Derry TownshipThe Township, an Applicant should review and complete the following general steps. A series of application process diagrams located on file at the Township Administrative Offices also outline the general parameters and steps associated with various types of development submissions.

Step 1: The Zoning Map illustrates the location of each parcel in its particular assigned Base Zoning District.

In what Zoning District is my lot located?	See Map 1
What Overlays apply to my lot?	See Maps 2, 3 and 4

Step 2: Certain land uses are permissible in each Zoning District.

What uses are permitted on my lot?	See Tables 1, 2 and 3 (225-205.A)
What is the basic minimum lot size?	See §225-303 - §225-3178

Review minimum lot size exceptions. See and §225-206

Step 3: Established patterns of development, access and circulation between public access ways and private property within the Township shapes the scale/type of development/access that

are permissible.

What type of thoroughfare overlay, if any, is adjacent to my lot? ——————See Map 2

Step 4: Criteria applicable to each lot is also outlined. In some cases, there are minimum dimensional requirements; in some cases, there are maximum dimensional requirements.

What are the various front, side and rear yard sSetbacks, and other dimensional requirements affecting my lot?——————————
See §303 - §3178

What type of height parameters are applicable to my lot? See §303 - §3178

Step 65: Requirements for other aspects of development are also defined.

What are the off-street parking requirements related to my lot? See §225-401402

May I have a sign? See §225-403.5401.4-41

Step 76: Sometimes there is a process to obtain development approval. To complement this Ordinance, additional information is available at the Township Administrative Offices.

How do I get municipal approval within Development Approval Areas? ——————————————————————————————
——————————————————————————See §225-302.3 and §501.587

Identify which Development Approval Area is assigned to the lot and §225-403401.4 See Map 4

See Process Diagrams on File at the Township Administrative Offices——————————————————————————— See Appendix ??

Step 87: Most uses require a zoning permit and many others also require a building code permit or other approvals.

How do I obtain a zoning permit? See Article VIII

Article II
Form and Function

§225-201. Types of Zoning Districts and Overlays.

The Township is divided into a series of base zoning districts and overlays as illustrated on the Official Zoning Map of Township of Derry and Official Zoning Overlay Maps of Township of Derry.

§225-202. Zoning Map and Overlay Zoning Maps.

The Official Zoning Map and Official Overlay Maps of the Township of Derry are incorporated as part of this Chapter and shall define the zoning districts and overlays described in this Chapter.

§225-203. Boundaries of Zoning Districts and Overlays; Interpretation.

A. The boundaries of the districts shall be as shown on the Official Zoning Map and Official Overlay Maps of the Township of Derry which isare on file in the Township Office, except for the Floodplain Overlay, which is delineated in the most current Flood Insurance Study and Flood Boundary and Floodway Map of the Township of Derry, as prepared by the Federal Insurance Administration. Generally, the boundary lines follow lot lines or centerlines of streets. Boundaries that approximately follow the centerline of streams, rivers or other bodies of water, shall be construed as following such centerlines. In unsubdivided property, boundaries shall be determined by use of the scale or dimensions indicated on the Official Zoning Map or Official Overlay Maps. IQuestions and interpretation concerning the exact location of district boundary lines shall be determined by the Zoning Officer.

B. All territory which may hereinafter be annexed to the Township shall be considered to be in the Conservation Zoning District unless it is reclassified.

§225-204. Authentication of Zoning Map.

Whenever there has been an amendment to the boundary of a zoning district or a reclassification of a zoning district, the Zoning Map or Overlay Zoning Maps of the Township of Derry shall be accordingly revised and shall be duly certified by the Township Secretary.

§225-205. Permitted Uses.

A. Principal Uses

Principal uses and/or associated buildings/structures are permitted on a lot as designated in Table 1 as follows:

1. (P) a permitted use by right on a lot anywhere within the specified base zoning district (P),

2. (C) a use permitted as a conditional use

3. (SE) a use permitted by special exception

4. (O#) a use permitted in a specific zoning overlay

as a permitted use by right based upon a specified street segment in a specified base zoning overlay district (O), as a conditional use (C) or as a use by special exception (SE).

B. B. Accessory Uses.

Accessory uses and/or associated accessory buildings/structures are permitted only in conjunction with an established principal use and must be located on the same lot as the principal use.

Table 1: Zoning Ordinance Land Use Table Permitted Uses	Base Zoning Districts														
	Conservation	**R-1**	**R-2**	**R-3**	**General Commercial**	**Planned Campus North**	**Planned Campus South**	**Planned Campus West**	**Medical Campus Central**	**Commercial Recreation**	**Commercial Golf**	**Palmdale Mixed Use**	**Hershey Mixed Use**	**Limited Compatibility**	**Industrial**
Residential Uses															
Single-family Detached Dwelling	P	P	P	P	P			C				P	P		
Single-family Semidetached Dwelling				P				C				P	P		
Single-family Attached Dwelling (Townhouse)				P				O7				O6~~,O8~~	~~O9~~C		
Single Family Conversion			C	C								C	C		
Two-family Detached Dwelling				P				O7				O6~~,O8~~	~~O9~~P		
Multifamily Apartment Dwellings				P		C		C				O6,~~O8,~~	~~O9~~C		
Bed and Breakfast Home	P	C										SE	SE		
Boarding Home					P					P					
Dwellings for Employees & Students							P		P						
Farm Home Occupation	P	SE	SE	SE	SE	SE	SE	SE	SE	SE	SE	SE	SE	SE	SE
Family Child Care Home	SE	SE	SE	SE			SE	SE				SE	SE		
Mobile Home Park				C											
Private Community Facilities/Recreation Areas		P	P	P	P	P	P	P	P	P	P	P	P		P
~~Tourist Home~~								~~P~~		~~P~~					
Home Occupations	P	P	P	P				P				P	P		
No-Impact Home Based Business	P	P	P	P	P	P	P	P~~SE~~	P	P	P	P	P	P	P
Accessory Dwelling Units	SE	SE	SE	SE	SE	SE	SE	SE	SE	SE	SE	SE	SE P	SE	SE
Commercial Uses															
~~Amusement Arcades~~										~~P~~					
Auction Houses	O12	O12			P			~~C~~							
Automobile and Truck Leasing/Rental					P			~~P~~							P
Automotive Car Wash/Lubrication Facilities					P			C~~P~~				C ~~(O10)~~	C ~~(13)~~		P
Bakery, Retail					P			P				P	P		
Business and Professional Offices	O12	O12			P	P		P	P			P	P		P
Campgrounds										SE					
Cigar, Hookah, and/or Vapor Lounge					C										
Commercial Entertainment Signs										O4					
Commercial Laundry					P			~~P~~							P
Commercial Parking Lot or Structure						C		~~P~~	C	P		P	P		
Communications Antenna, Building-mounted	P				P	P	P	P	P	P	P	P		P	P
Communications Antenna, Utility-mounted	P	P	P	P	P	P	P	P	P	P	P	P	P	P	P
Communications Antenna, Towers ≤ 50 feet in height	P	P	P	P	P	P	P	P	P	P	P	P	P	P	P
Communications Antenna, Towers > 50 feet in height	SE				SE	SE	SE	~~P~~	SE	SE	SE	SE		SE	SE
Communications Antenna, Co-located	P	P	P	P	P	P	P	P	P	P	P	P	P	P	P
~~Crematory~~															~~P~~
Dry Cleaning Service, Retail					P			P ~~C~~				P	P		
Financial Institutions					P			P				O10	O9, O13		
Food Catering					P			C				C	C		P
Food Services Without Drive-Through					P	P		P~~C~~		P	P	O10	O9, O13, O8		
Food Services With Drive-Through					P			C							
~~Food Trucks and Sidewalk Vending Unit (Pushcarts)~~					~~P~~			~~C~~				~~O10~~	~~O9~~		
Fuel Service - Minor					P			C				~~(C)O10~~	C ~~(13)~~	P	P

Fuel Service - Major					P			C~~O9,~~ ~~O8, O13~~				~~O10~~	~~(C)O13~~	P	P
Funeral Homes					P			C				~~C~~	C		
Guest Lodging, Dining and Conference Facilities					P	P			C	P			~~SEC(9)~~		
Healthcare Practitioners Office					P	~~P~~		P	P	~~P~~		O6,O10	~~O6,~~O9,O8,	~~P~~	

Table 1: Zoning Ordinance Land Use Table Permitted Uses	Base Zoning Districts														
	Conservation	**R-1**	**R-2**	**R-3**	**General Commercial**	**Planned Campus North**	**Planned Campus South**	**Planned Campus West**	**Medical Campus Central**	**Commercial Recreation**	**Commercial Golf**	**Palmdale Mixed Use**	**Hershey Mixed Use**	**Limited Compatibility**	**Industrial**
Commercial Uses															
Heliport									C						C
Hotels and Motels					P	~~P~~C		C		P		O10	O9, O13		
Horse Riding Stables & Facilities, No Horse Racing	P														
Kennel	P				P									P	P
Landscape and Garden Service - non-retail	P				P	C									P
Landscaping and Garden Center - retail					P			C				~~C~~	~~C~~		
Laundromat					P			P				~~O8,~~O10	~~O9~~P		
Membership Club					SE			C		SE	P	C	C		
Micro-distilleries/Breweries					P			P					O9		
Motor Vehicle Fuel, Wholesale														P	P
Motor Vehicle Repair Garages					P										
Motor Vehicle Sales and Service					P										
Mixed Use Building					P	C	P	P	P	P		O6,~~O8,~~ O10	~~P~~O9		
Outpatient Medical Treatment Facilities					P			O7	P						
Personal Service Establishments					P			P				P	P		
Pet Grooming Facilities					P			P				~~O8,~~O10	O9,O13		
Photocopy Service					P			P				~~O8,~~O10	O9		
Private Parking Lot or Structure						C		P	C	P		P	P		P
Recreational, Sports and Entertainment Facilities															
Amusement, Theme, Entertainment or Water Parks										O4					
Amusement Arcades										P					
~~Arboretums &~~ Botanical Gardens	C					P	P			P					
Archery & Shooting Ranges, Indoor	C					C								C	
Archery & Shooting Ranges, Outdoor						C								C	
Bowling Alleys					P			C		P					
Casinos & Gambling Facilities										C				C	
Country Club	C									P	P		P		
Exercise & Fitness Centers					P			P		P		O6,~~O8,~~ O10	O9, O8, O13		
Golf Courses (Conventional & Special)	C									P	P		~~O8~~		
Recreation Facilities for Employees, Faculty & Students						P	P		P	P					P
Sporting and Entertainment Arenas & Stadiums										P					
Sport & Field Complexes					P	P				P		~~O10~~O6			
Zoos	C				P					P					
Rental and Leasing Businesses															P
Research/Technology Business Incubator								C	C						C
Residence Hotels and Motels					P	C		C		P					

Retail, Large-Scale					P			C				C (6, 10)	C9, 13, 8		
Retail, Small-Scale					P			P		C		P	P		
Service and Repair Facilities					P										P
Sexually Oriented Businesses										C				C	

Table 1: Zoning Ordinance Land Use Table Permitted Uses	Base Zoning Districts														
	Conservation	**R-1**	**R-2**	**R-3**	**General Commercial**	**Planned Campus North**	**Planned Campus South**	**Planned Campus West**	**Medical Campus Central**	**Commercial Recreation**	**Commercial Golf**	**Palmdale Mixed Use**	**Hershey Mixed Use**	**Limited Compatibility**	**Industrial**
Commercial Uses															
Specialty Home					C							C	C (9)		
Studios/Gallery for Teaching, Dancing, Art, Music or Similar Cultural Pursuits					P			P				P	P		
Taxidermy					C										P
Theater and Auditorium					P			C		P		O8,O10	O9,		
Veterinary Office					P			P	P			O8,O10	O9,		
Veterinary Hospital					P				P						
Visitor Center						C				P			P		
Winery	C				P			P		C					
Industrial Uses															
Assembling															P
Production Bakery															P
Commercial/Industrial Laundering and Dry-Cleaning															P
Crematory															P
Grain Milling															P
Importing & Exporting Establishments															P
Industrial Equipment Sales & Repair															P
Laboratories															P
Machine Shop															P
Manufacturing														C	P
Mineral Extraction	P														C
Printing and Publishing															P
Processing															P
Self-storage facilities															P
Solid, Liquid or Gas Fuel Dealers															P
Solid or Liquid Waste Transfer Stations															P
Storage, Including Fuel Storage															P
Truck Terminals														C	
Waste Management Facilities														C	
Warehousing															P
Welding Shop															P
Wholesale Trade Establishments															P
Wood Millworks															P
Institutional Uses															
Life Care Facilities						C		C	P			C	C	C	
Group Child Care Facilities					P			C	P			C	C		

Group Home for Persons with Disabilities	C		C						C					C	
Group Home for Persons without Disabilities	C								C					C	
Hospital					P				P						
Incinerators and Crematoriums ~~for On-Site Generated~~									C					C	C
Medical-related Research Facilities								O7	P					P	P
Museums					P		P	P		P		P	P		
Other Scientific Research, Development and Training								O7	P					P	C
Place of Worship/Place of Assembly	P	P	P	P	P		P	P	P	P		P	P	P	
Prisons														P	
Schools	P	P	P	P	P	P	P	P	P	P		P	P	P	
Skilled Nursing								C	P			C	C		
Table 1: Zoning Ordinance Land Use Table Permitted Uses	Base Zoning Districts														
	Conservation	**R-1**	**R-2**	**R-3**	**General Commercial**	**Planned Campus North**	**Planned Campus South**	**Planned Campus West**	**Medical Campus Central**	**Commercial Recreation**	**Commercial Golf**	**Palmdale Mixed Use**	**Hershey Mixed Use**	**Limited Compatibility**	**Industrial**
Municipal/Public Uses															
Administrative Offices of County, State or Federal Government (Office)	C	C	C	C	P	C	C	P	P	P	P	P	P	C	P
Libraries	P	P	P	P	P		P	P	P	P		P	P	P	
Municipal Buildings and Uses	P	P	P	P	P	P	P	P	P	P	P	P	P	P	P
Fire/Emergency Services	P	P	P	P	P	P	P	P	P	P	P	P	P	P	P
Parks, Playgrounds & Recreation	P	P	P	P	P	P	P	P	P	P	P	P	P	P	P
Utility Service Structures	P	P	P	P	P	P	P	P	P	P	P	P	P	P	P
Utility Buildings						P						P	P		P
Recycling Center														C	
Sewage Treatment Plants						P									C
Agricultural/Conservation Uses															
Agricultural Uses	P	P	P	P	P	P	P	P	P	P	P	P	P	P	P
Cemeteries	P														
Conservation Areas & Uses	P	P	P	P	P	P	P	P	P	P	P	P	P	P	P
Miscellaneous															
Uses similar to specified permitted uses	C	C	C	C	C	C	C	C	C	C	C	C	C	C	C
Billboard														C	C
Unique Buildings	C	C	C	C	C	C	C	C	C	C	C	C	C	C	C
Cluster Development Option	C	C	C	C											
Affordable Housing Density Option	~~P~~	~~P~~	P	~~P~~	~~P~~	~~P~~	~~P~~		~~P~~	~~P~~	~~P~~	P	P	~~P~~	~~P~~
Wind Energy Conversion Systems (Principal Use)	P													P	P
Solar Panel Arrays (Principal Use)	P													P	P

Table 2: Conditional Use/Special Exception Summary Matrix. Reserved.

§225-206. Dimensional Criteria.

A. See 225-303 through §225-3178 for base dimensional standards of eachper district.

B. Lot Size Reduction. No lot shall be reduced in size or otherwise altered so that any nonconformity with this or any other applicable Township ordinances shall be createdexist. This section shall not, however, prohibit lot size reductions when such reduction is the result of conveying a portion of a lot to a government, government agency or public utility for public purposes.

C. Minimum lot area for uses utilizing individual sewage disposal systems and/or individual water supply systems in any zoning district shall be one acre in area, and the maximum residential density for any dwelling unit shall be one dwelling unit per net developable acre, unless the individual zoning district regulations specify a greater minimum lot area or lesser density. This section shall not be applied to be more restrictive than the lot criteria exception set forth in §225**-206.E** when §225**-206.E** is applicable.

D. Existing Lot Area Exceptions.

1. An undeveloped lot, which does not include sufficient net developable area to conform to the minimum lot area required by the zoning regulations for the district in which the lot is located, may be used as the site of a building or use permitted in the zoning district; provided, that all other applicable requirements of this Chapter and other applicable ordinances and applicable State or Federal regulations are met; and, provided that the following criteria have been met:

   a. The lot was created subsequent to February 2, 1971, by a final subdivision plan approved by the Township Board of Supervisors and recorded in the Dauphin County Recorder of Deeds Office, or the lot was described as a separate lot or parcel of land on a deed recorded in the Dauphin County Recorder of Deeds Office first recorded prior to February 2, 1971; and

   b. The lot has continued to be described as a separate lot or parcel of land on all deeds conveying said lot subsequent to February 2, 1971; and

   c. In zoning districts which specify minimum lot areas for different uses, this exception shall permit only those buildings or uses which are required to have the least lot area in a particular zoning district, other than for those uses which are not required to have a minimum lot area.

2. The following uses shall be exempt from the minimum lot area requirements specified in the various zoning district regulations. This section shall not be construed to exempt any other lot criteria such as developing on sensitive environmental areas, yard areas, etc.

   a. Agricultural uses not involving buildings, structures or the keeping of animals.

   b. Private or public utility service structures.

   c. Firehouses.

   d. Municipal buildings and uses.

d.

E. ~~Existing~~ Lot Dimension Exceptions.

1. An undeveloped lot, which does not meet one or more minimum dimensional criteria required by the zoning regulations for the district in which the lot is located, may be used as the site of a building or use permitted in the zoning district; provided, that all other applicable requirements of this Chapter and other applicable ordinances and applicable State or Federal regulations are met; and, provided that the following criteria have been met:

   a. The lot was created subsequent to February 2, 1971, by a final subdivision plan approved by the Township Board of Supervisors and recorded in the Dauphin County Recorder of Deeds Office, or the lot was described as a separate lot or parcel of land on a deed recorded in the Dauphin County Recorder of Deeds Office prior to February 2, 1971; and

   b. The lot has continued to be described as a separate lot or parcel of land on all deeds conveying said lot subsequent to February 2, 1971; and

   c. In zoning districts which specify different dimensional criteria for different uses, this exception shall permit only those buildings or uses which are required to have the least dimension in the particular zoning district.

2. The following uses shall be exempt from the minimum lot width and depth requirements specified in the various zoning district regulations. This section shall not be construed to exempt any other lot criteria, developing on sensitive environmental areas, yard areas, etc.

   a. Agricultural uses not involving buildings, structures or the keeping of animals.

   b. Private or public utility service structures.

   c. Firehouses.

   d. Municipal buildings and uses.

   e. Open space of cluster developments.

F. Conservation Zoning District Lot Criteria Exceptions

1. Subdivision of Conservation Zoning District Lots existing since December 23, 1978. A lot which is represented by an existing deed which was first recorded in the Dauphin County Recorder of Deeds Office prior to December 23, 1978, and which is located in the Conservation Zoning District may be subdivided after the effective date of this Chapter in accordance with the following criteria which establish ~~Maximum densities, and minimum lot area, lot width and lot depth~~area and setback standards which are less than that specified elsewhere in this Chapter for lots located in a Conservation Zoning District:

   a. Number of lots permitted to be subdivided in conformance with the provisions of this section:

      i. Existing lots up to 25 acres in area: five lots.

      ii. Existing lots greater than 25 acres in area: five lots plus one lot per each 10 acres over 25 acres.

b. Minimum lot area.

i. Minimum lot area where served by public water and public sewer facilities shall be 25,000 square feet.

ii. Minimum lot area where served by public water facilities only shall be ~~40,000~~43,560 square feet.

iii. Minimum lot area where served by public sewer facilities only shall be 25,000 square feet.

iv. Minimum lot area where served by neither public water nor public sewer facilities shall be 43,560 square feet.

v. Minimum lot area shall be 43,560 square feet if existing slope in excess of an 8% grade occurs over 50% or more of the lot area.

c. Minimum lot width. The minimum lot width shall be 125 feet provided that the minimum lot frontage at the street right-of-way line shall not be less than 100 feet; provided, however, that where the minimum lot area due to slope or lack of public sewer is 40,000 square feet, the minimum lot width shall be 200 feet; and further provided, that on a cul-de-sac, the lots on the curved right-of-way shall have a minimum width at the street right-of-way line of 75 feet.

d. Minimum lot depth. The minimum lot depth shall be 150 feet.

2. The following lot requirements shall apply to both lots that were created prior to enactment of this Chapter and lots that have been created in accordance with Section 225-206.F, which are less than two (2) acres in area:

a. Minimum yard area depth for Principal Uses.

i. Front Yard: 30 feet.

ii. Rear Yard: 30 feet.

iii. Side Yard: 12 feet

b. Minimum yard area depth for Accessory Uses.

i. Front Yard: 50 feet.

ii. Rear Yard: 12 feet.

iii. Side Yard: 12 feet.

c. Maximum Impervious Coverage: 30%

d. Minimum Vegetative Coverage: 60%

G. Yard Area Exception.

1. Front Yard Area Exception. In developed areas, the Township Zoning Officer shall permit the minimum front yard area to be reduced for a proposed use to be in proper relation to existing adjacent uses, when the following findings are made:

i. That the proposed front yard area is the average of the existing adjacent front yards areas located on each side, and within 100' of the proposed improvement. Where there is only one adjacent yard, such as corner lots, the single existing front yard area may be utilized to determine the permitted reduction.

ii. That the reduced yard area would not conflict with required intersection sight distances or areas necessary for future street, sidewalk or utility construction.

iii. The requirement of landscaping for parking areas serving nonresidential uses will not be diminished.

2. Residential Lots Shown on Previously Recorded Subdivision Plans. All recorded subdivision plans depicting more than 4 lots that have been lawfully created by an approved and recorded final subdivision plan, which was recorded in the Dauphin County Recorder of Deeds Office based on prior Township zoning regulations, which are now are subject to increased yard area requirements under this Chapter, shall be permitted to comply with the yard area requirements of record, only to the extent documented on the recorded final plan. This exception is intended to maintain the character of existing development areas and shall be permitted upon affirmative determination of the Zoning Officer prior to issuance of a zoning permit for a proposed use, structure or alteration to an existing structure.

H. Permitted Encroachments in Required Yard Areas.

The following encroachments are permitted in the required yard areas:

1. Light fixtures.

2. Sidewalks or walkways on grade.

3. Access drives.

4. Signs displayed in front or rear yards in accordance with §225-403.5401.4 of this Chapter.

5. Fences permitted by §225-407414 of this Chapter, and retaining and decorative walls not exceeding a height of six feet.

6. Flagpoles for the display of official government flags of the United States and its political subdivisions.

7. Sidewalk or walkway steps when not connected to a building, porch, deck or other part of a building or structure.

8. Vegetation, including trees, landscaping and vegetative buffering.

9. Landscaping materials.

10. Decorative lawn ornaments not exceeding 48 inches in height.

11. Bird feeders.

12. Handrails along sidewalk or walkway steps.

13. Parking spaces for single-family detached, single-family semidetached, single-family attached and two-family detached dwellings and multifamily apartment dwellings having less than four dwelling units per building.

14. Parking spaces in rear yard area only of Hershey Mixed Use and Palmdale Mixed Use zoning districts.

15. Roof overhangs, egress window wells and doors, HVAC equipment, and emergency power generators, up to a maximum dimension of two feet measured horizontally.

16. Awnings in the front and side yard areas only, to a maximum of 5 feet from the face of the building wall and not less than 2 feet from a property line in all zoning districts except the Downtown Core Overlay. Within the Downtown Core Overlay, awnings shall comply with the minimum yard area requirements of §225-64.D.(1)this Chapter. Awnings that overhang sidewalks shall be a minimum of 7 feet above the sidewalk.

17. Structures required for maintaining the safe passage of vehicular/pedestrian traffic to include vehicular or pedestrian bridges, underpasses and all the appurtenant structures required for the functioning or physical stability of these structures when such structures are used to facilitate a street crossing or a crossing of common property line between two properties owned by the same party.

18. Stormwater management facilities not designed to retain a permanent standing pool of water.

19. Traffic control devices and parking lot tolling and security facilities with the stipulation that parking lot tolling and security buildings shall maintain at least a minimum of 15 foot yard area between the encroachment and the adjacent street right-of-way line or adjacent property line. The yard area adjacent to the encroachment shall provide a visual screen at least three feet high which shall consist of plants, fences, walls or a combination thereof.

20. Utility structures not exceeding 84 inches in height, emergency call stations, and utility poles, masts or towers other than communications towers.

21. Mass transit, bus, tram and/or trolley ways and stops involving surface improvements and shelters.

22. Railroad sidings.

23. Special bulk containers, when in conformance with the requirements of Chapter **168**, Solid Waste, § 168-12C(2), of the Code of the Township of Derry.

24. Residential compost containers holding less than 120 gallons (16 cubic feet) within the side or rear yard area(s).

25. Functional rain barrels holding less than 65 gallons that are connected to a roof downspout system of a structure.

26. A recreational activity vehicle or utility vehicle stored in accordance with §225-415190.

27. Public bicycle racks, benches, planters and similar public streetscape features.

28. Patios located in the Downtown Core and Palmdale Chocolate Avenue Overlay.

H. I. Maximum Height Exceptions.

1. Buildings and/or structures devoted to agricultural uses may be permitted up to a maximum height of 50 feet in all zoning districts, provided that their required yard areas are increased by two feet for every one foot of height above the maximum height requirements for a principal use or detached accessory use, as required by the underlying zoning district to which the building and/or structure will be constructed.
2. The following structures, when erected on a principal or accessory building roof, may exceed the actual building height by 50%, provided that in no situation shall the following structures exceed a maximum height of 115 feet, for those buildings permitted to be not more than 95 feet in height, and 150 feet, for those buildings permitted to attain a height of 130 feet. Not more than 10% of the roof area, when projected to a horizontal plane, shall be the site of roof structures which exceed the normal height limitations for principal or accessory uses as specified elsewhere in this Chapter:
    i. Belfries,
    ii. Chimneys,
    iii. Cupolas,
    iv. Domes,
    v. Flagpoles,
    vi. Antennas, other than satellite antennas (see §225-412—) and communications antennas (see §225-419420—),
    vii. Skylights,
    viii. Spires,
    ix. Tanks,
    x. Penthouses for housing mechanical equipment,
    xi. Windmills,
    xii. Sirens or alarms, and
    xiii. Utility poles/masts/towers.
3. The following free-standing accessory structures are permitted to exceed the maximum height limitations specified elsewhere in this Chapter and may have a maximum height of 50 feet:
    i. Antennas, other than satellite antennas (see §225-412—) and communications antennas (see §225-420—);
    ii. Utility poles/masts/towers other than communications towersm., (See §225-___),
    iii. Windmills,
    iv. Sirens or alarms, and
    v. Flagpoles.
4. The Township Zoning Hearing Board may grant a special exception to permit public utility service structures to exceed the maximum height regulations when the Board finds that the proposal does not adversely affect the health, safety or welfare of the general public or adversely affect the use and value of abutting properties and when the applicant can demonstrate a public need for the structures that could not be accommodated if the

structures were not constructed to a height in excess of this Chapter's maximum height limitations. This special exception procedure shall not be available in or applicable to the Airport Safety Zone Overlay.

I. J. Lots to Front on Public Streets.

All lots shall abut a public street, other than an alley, for the minimum distance specified herein as being the minimum lot width. See "cluster development option," §225-501.43 and Master Plan requirements 225-403401.4.A.7.e.501.58

J. K. Combining of Nonresidential Lots Previously Subdivided.

Lands which are represented on a subdivision plan which has been approved by the Township for nonresidential use shall not be later combined with other lands which are part of the subdivision plan or other adjacent lands, unless a revised subdivision plan is approved by the Township which reflects the revised lot configuration.

K. L. Net Developable Area Calculation.

1. In all of the zoning district regulations set forth in this Chapter, maximum residential densities are established which are expressed in terms of maximums per net developable acre. The effective capacity rating factors of a parcel of land must first be known in order to calculate the net developable area. The effective capacity rating is a system of measuring the development potential of a lot based on environmental or man-made development constraints.

2. Determining net developable acres. The following is a list of conditions or areas which have been assigned effective capacity rating factors which, when multiplied against the area which exhibits one of the following constraints, will yield the net developable acres of the land or portion of the land affected:

Table 3: Effective Capacity Rating Factor

Condition or Area	Effective Capacity Rating Factor
Floodways and flood fringe	0.1
Areas having slopes greater than 10% but less than 20%	0.7
Areas having slopes of 20% but less than 30%	0.5
Areas having slopes of 30% of greater	0.1
Areas of streams, ponds, lakes and dams	0.1
Wetlands	0.1

Condition or Area	Effective Capacity Rating Factor
Quarries and areas within 50 feet of perimeter of quarries	0
Cemeteries	0
Landfills	0
Existing streets right-of-way	0
All other areas	1.0

3. In the event more than one constraint exists for a particular area of land, the factor having the greatest constraint shall be used. Example: A ten-acre lot exists on which five acres exist at 25% slope and one acre exists as a floodway area. The five sloped acres, when multiplied by the effective capacity rating factor of 0.5, yields a product of 2.5 acres. The one acre of floodway, when multiplied by the effective capacity rating factor of 0.1, yields, a product of 0.1 acre. Four acres remain with no constraints which, when multiplied by an effective capacity factor of 1.0, yields a product of four acres. All of the yields are then added, 2.5 + 0.1 + 4.0, for a total of 6.6 acres. This sum is known as the net developable acreage, or amount of net developable acres, and is used as the base figure for determining the maximum density permitted for any property.

Article III
Zoning Districts and Overlays

§225-301. District Overview.

A. The following zoning districts are applicable to the Derry Township Zoning Ordinance and Zoning Map:

1. C - Conservation.
2. R-1 - Larger Lot, Single-Family Residential.
3. R-2 - Smaller Lot, Single-Family Residential.
4. R-3 - Smaller Lot, Variable Residential.
5. GC - General Commercial.
6. PCN - Planned Campus North.
7. PCS - Planned Campus South.
8. PCW - Planned Campus West.
9. MCC - Medical Campus Central.

8.

9.10. CR - Commercial Recreation.

10.11. CG - Commercial Golf.

11.12. PMU - Palmdale Mixed Use.

12. HMU - Hershey Mixed Use.

13. PCW - Planned Campus West.

14. LC - Limited Compatibility.

15. I - Industrial.

B. The purpose of the Base Zoning Districts is to provide area for the following:

1. C - Conservation. The retention of rural and semi-rural-oriented development in context of expansive areas of sensitive natural and cultural resources.
2. R-1. For larger, lot, single-family residential development.
3. R-2. For smaller lot, single-family residential development.
4. R-3. For smaller lot, mixed residential development of varying intensities.
5. GC - General Commercial. To accommodate activities of commerce to the local and regional population.

6. PCN - Planned Campus North. Where For multi-building, planned campus-type of development with institutional uses and limited residential are planneduses.

7. PCS - Planned Campus South. Where For multi-building, planned campus-type development of institutional, residential, administration and educational uses are planned.

8. PCW - Planned Campus West. For multi-building, planned campus-type development of residential, commercial and institutional uses, and where all development is accommodated at a traditional scale and intensity of development which complements the surrounding residential neighborhoods.

8.9. MCC - Medical Campus Central. For the network of buildings, services and complementing research/technology business incubator associated with the locally and regionally serving medical professions.

9.10. CR - Commercial Recreation. To support and promote the development of commercial recreation and entertainment enterprises that provide significant economic development benefits to the Township and the surrounding communities

10.11. CG - Commercial Golf. For traditional and specialty golf course activities.

11.12. PMU - Palmdale Mixed Use. To enhance and expand development that complements the established mixture of smaller lots and uses geared toward local residents.

12.13. HMU - Hershey Mixed Use. To retain the varying intensities of pedestrian-oriented businesses, residences, neighborhood forms and regional attractions that complement and respect the Township's traditional historic and cultural core.

13. PCW - Planned Campus West. For multi-building, planned campus-type development of residential, commercial and institutional uses, and where all developmentTo is accommodated at a limited traditional scale and intensity of non-residential development which complements the surrounding residential neighborhoods.

14. LC - Limited Compatibility. To accommodate unique uses with inherent characteristics that correspond to a narrow range of other residential and/or non-residential uses

15. I - Industrial. Where To accomodate manufacturing or similar industry-oriented uses can occur.

§225-302. Zoning Overlay Overview and Purposes.

Within Derry Township the Township, a series of Zoning Overlays are established as permissible under the provisions of Section 603 of the Pennsylvania Municipalities Planning Code. The Zoning Overlays are provided for the purposes of maintaining continuity in Derry Township the Township's land uses, rights-of-ways and community character and to maintain general consistency with the Derry Township Comprehensive Plan. The location of each Zoning District and Overlay are made part of the Official Zoning Maps and are illustrated on Maps 1 through 4. The Zoning Overlays are categorized based upon their relationship to thoroughfares, environment, development approval areas and signage.

§225-302.1. Thoroughfares.

In retaining general compatibility with the Derry Township Comprehensive Plan. , the following Zoning Overlays have been established to relate to thoroughfares and future development areas within Derry Township the Township and are described in detail in Section 225-403401.

A. Planned Campus West Future Development Area - This Overlay addresses land use compatibility, stormwater management functions and access safety unique to designated lots within the vicinity of Bullfrog Valley and Middletown Roads.

B. Derry Road - This Overlay addresses land use compatibility and connectivity unique to designated lots within the vicinity of Derry Road.

C. Palmdale Chocolate Avenue - This Overlay addresses land use compatibility unique to designated lots within the vicinity of East Chocolate Avenue.

D. Governor Road - This Overlay addresses landscape consistency unique to designated lots within the vicinity of Governor Road.

E. Hersheypark - This Overlay addresses land use compatibility unique to designated lots within the vicinity of Hersheypark.

F. Hersheypark Drive/Route 39 - This Overlay addresses landscape consistency unique to designated lots within the vicinity of Hersheypark Drive/Route 39.

G. Homestead/Fishburn Roads - This Overlay addresses landscape consistency unique to designated lots within the vicinity of Homestead and Fishburn Roads.

H. Middletown Road - This Overlay address stormwater management functions, future road improvements, access safety and bicycle infrastructure coordination needs unique to designated lots within the vicinity of Middletown Road.

I. Palmdale Future Development Area - This Overlay addresses land use compatibility unique to designated lots within the vicinity of future development areas adjacent to the existing Palmdale area of Derry Township the Township.

J. Route 322/422 - This Overlay, under the guise of PA Municipalities Planning Code Section 603, protects the historical landscape and viewshed unique to designated lots within the vicinity of the Route 322/422 Corridor.

K. Sand Hill Road - This Overlay allows for small-scale, local-serving non-residential uses in very strategic locations in the Sand Hill Road corridor where said uses minimize impacts to surrounding agricultural and residential uses, and should promote stormwater controls that protect highly erodible soils.

L.A. Downtown Core (Overlay 9) - This Overlay reinforces compatibility of established and new development character through the retention of a quality environment as a key ingredient in successful revitalization of this area. The image and character of Chocolate Avenue, as it continues to evolve and change over time, is Derry Township the Township's signature urban core.

M.B. Southern Core (?) (Overlay 13) – To be added to cover Governor Rd./Hockersville Rd./Fishburn Intersection.This Overlay is intended to provide a small commercial hub for residents and visitors to the area, while maintaining a village scale development that complements surrounding residential neighborhoods.

§225-302.2. Environment.

The following Environment Zoning Overlays have been established are to protect human safety as related to ground-based natural features and air-based manmade features within Derry Township the Township that impact the scale and/or placement of development. The following overlays have been established:

A. —Sensitive Environmental Resources Overlay as outlined in §225-206.L and §225-403401.2.

B. Floodplain Overlay as outlined in §225-403401.23.

C. Airport Safety Zone Overlay as outlined in §225-403401.34.

A. Sensitive Environmental Resources Overlay. This Overlay incorporates the extent and location of sensitive environmental resources as outlined in §225-206.L and 225-403.2 and on the Derry Township Environmental Resources Evaluation Requirements Form found on file in the Derry Township the Township Administrative Offices. The extent and location of these resources regulate the location of permissible development within Derry Township the Township.

B. Floodplain Overlay. The intent of these regulations is to promote the general health, welfare, and safety of the community; encourage the utilization of appropriate construction practices in order to prevent or minimize flood damage in the future; minimize danger to public health and safety by protecting water supply, sanitary sewage facilities, and natural drainage; reduce financial burdens imposed on the community, its governmental units, and its residents by preventing the unwise design and construction of development in areas subject to flooding; and comply with federal and state floodplain management requirements.

C. Airport Safety Zone Overlay. The purpose of the Overlay is to address the Pennsylvania State Aviation Code and Federal Aviation Regulation No. 77 requiring the limitation of building and structural height in "airport hazard areas." Areas contained within Derry Township the Township have been identified as being within the "airport hazard area" for the Reigle Airport, located in South Londonderry Township, Lebanon County, as defined in the Pennsylvania Aviation Code, and require special height controls. These height restrictions are designed to prevent any encroaching that would interfere with, or obstruct, normal airplane approaches or airport operations. Such interference or obstruction would pose a threat to the health, safety, welfare and convenience to residents of the Township, as well as passengers aboard airport aircraft. The airport safety zone is used to impose needed height restrictions as a zoning overlay, thereby enhancing public safety.

§225-302.3. Development Approval Areas.

The purpose of this Zoning Overlay is to outline the series of unique development approval area processes and applications related to proposed zoning applications within the Township. In addition to The four Development Approval Area Overlayss (See also §225- 403.4501.57) include:

A. North Master Plan.

B. South Master Plan.

C. West Master Plan.

D. Central Site DevelopmentMaster Plan.

If noWhen a Development Approval Area Overlay applies to a particular lot, the applicant shall is able to submit all an application of information as part of theoutlined in §225-403501.58401.4, Master Plan Approval Process. Township's standard application procedures.

The purpose of approving a Master Plan is to encourage owners to utilize and/or assemble large parcels of land to create a coordinated and well-conceived development which otherwise could not be created on small parcels of land. The Master Plan is a mechanism that permits owners and the Township to promote and encourage ingenuity in the layout and design of coordinated projects to more effectively improve and enhance sensitive natural resources, open spaces, etc. by allowing flexibility in the site layout from requirements in the underlying zoning.

§225-302.4. Signage.

The purpose of this Zoning Overlay is to distinguish the impacts and compatibility of signage within the Township (See §225-405.5). The three Signage Overlays include:

A. General Sign.

B. Downtown Core Sign.

C. Limited Sign.

INSERT BASE MAP AND OVERLAYS HERE. (Number all maps and title based on reference in the documents, i.e. Map 1 – The Township of Derry Official Zoning Map)

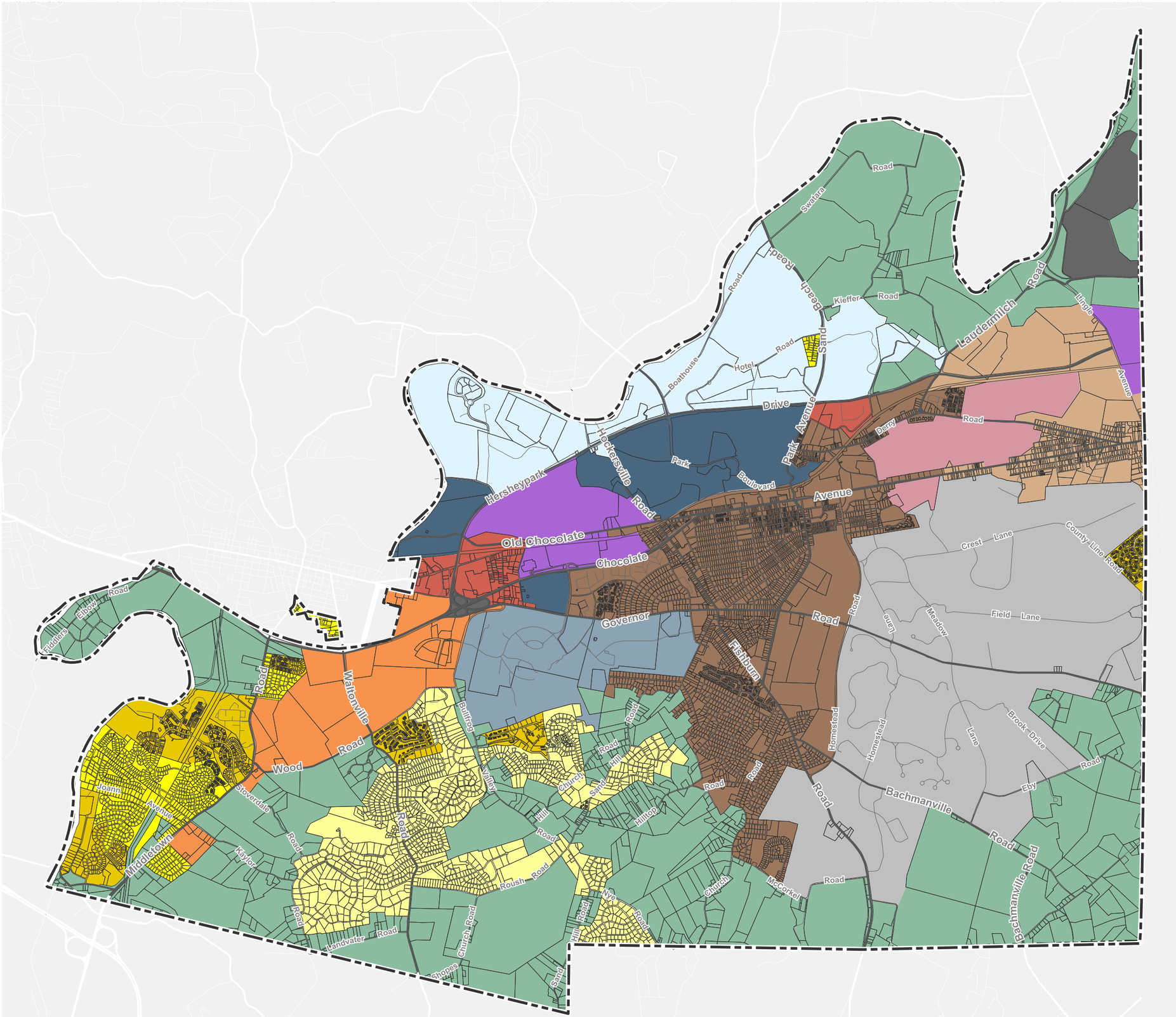

Legend

9-7-16 release

- Derry Township
- Surrounding Municipalities
- Highways
- Other Roads

Conserve, Recreate, Live

- Conservation
- Limited Compatibility

Live, Recreate

- R-1
- R-2
- R-3

Live, Shop, Eat, Recreate

- Palmdale Mixed Use
- Hershey Mixed Use

Work, Learn, Play, Eat

- Planned Campus North
- Planned Campus South
- Planned Campus West
- Medical Campus Central
- Commercial Recreation
- Commercial Golf
- General Commercial
- Industrial

OFFICIAL ZONING MAP

Base Zoning Districts

NORTH

from 5-4-16 public release

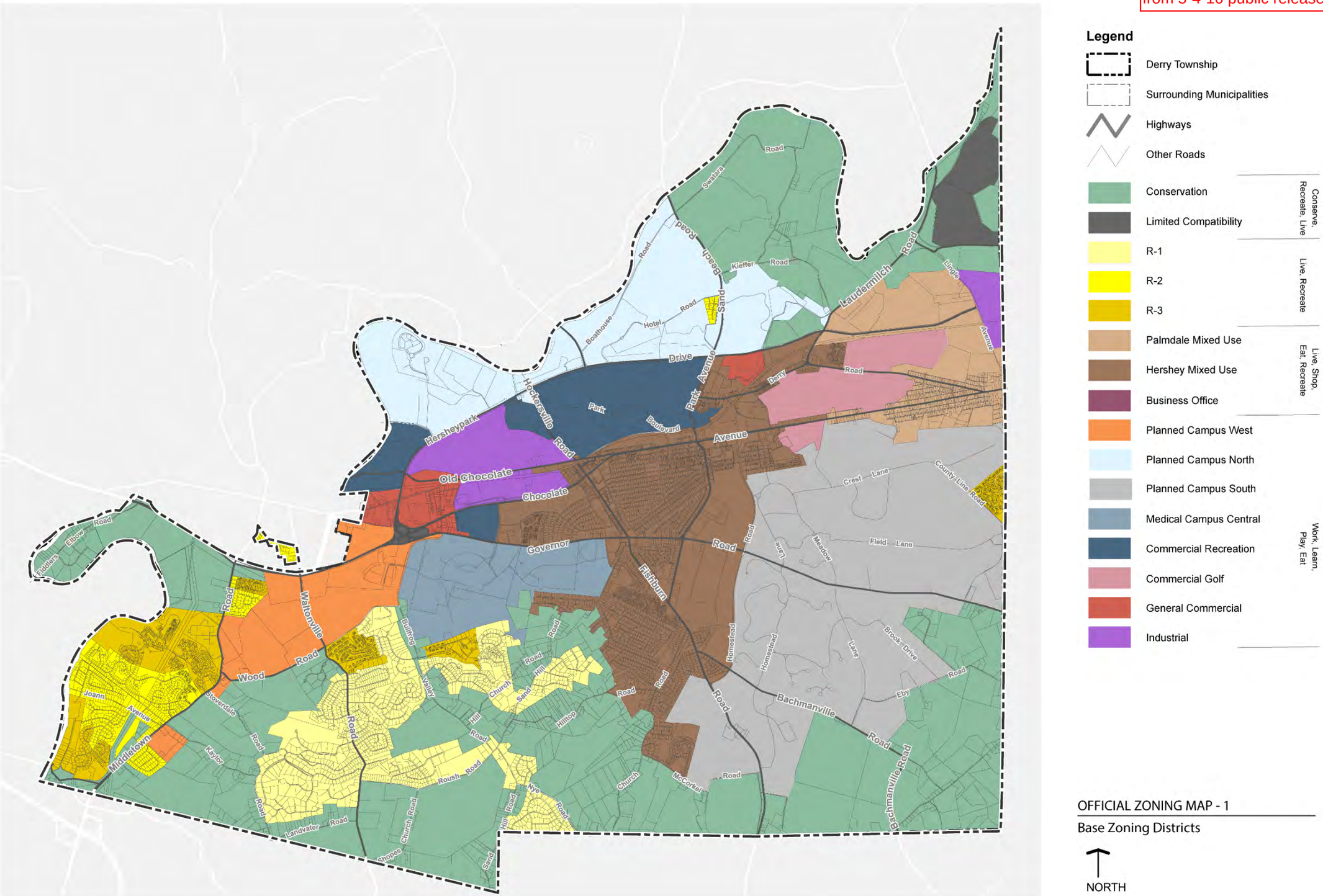

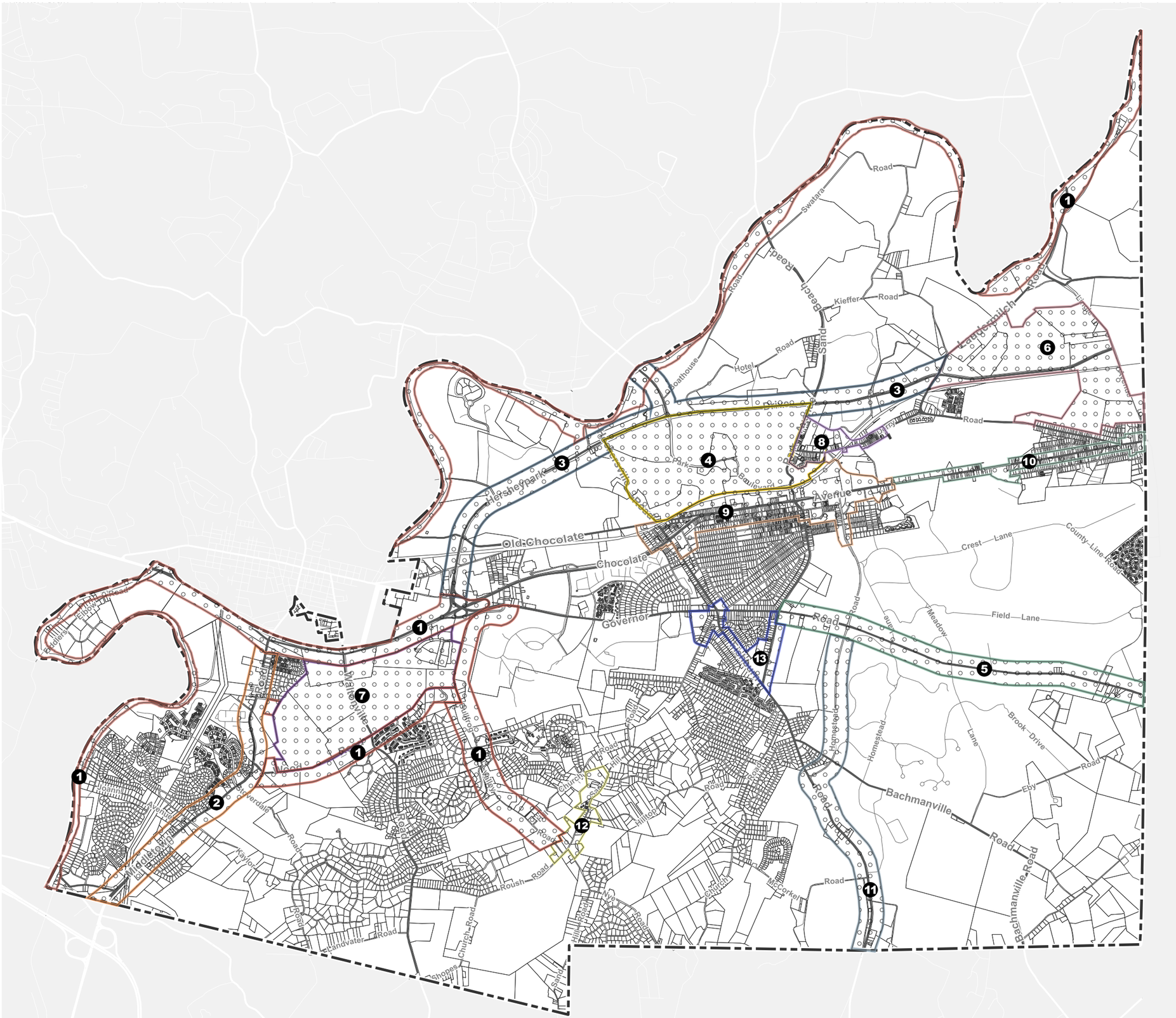
Old Chocolate
Chocolate
Governor
Road
Hershey Park
Drive
Avenue
Beach
Sand
Kieffer
Hotel
Boathouse
Swatara
Landsmith
Middletown
Bachmanville
Homestead
Meadow
Field
Crest
Lane
Brook
Drive
Eby
County Line
Bachmanville
Rouch
Church
Bullfrog
Valley
Hillcrest
Roush
Langvater
Schopes
Mt Gretna
Edelweiss
Elbow
Fairway
Rhoads
Lil Shoop
Middle Creek
Overdale
Taylor
McCorkell
Hillside
Weaver
Pine
Park
Boulevard
Walnut Bible
Rhoads
Rouch
Church
Hill
Valley
Bullfrog
Homestead
Meadow
Lane
Brook
Drive
Eby
Road
Bachmanville
Bachmanville Road
County Line Road
Field Lane
Crest Lane
Avenue
Boulevard
Park
Drive
Hershey Park
Swatara
Beach
Sand
Kieffer
Hotel
Boathouse
Landsmith
Middletown
Homestead
Meadow
Lane
Brook Drive
Eby

from 5-4-16
public release

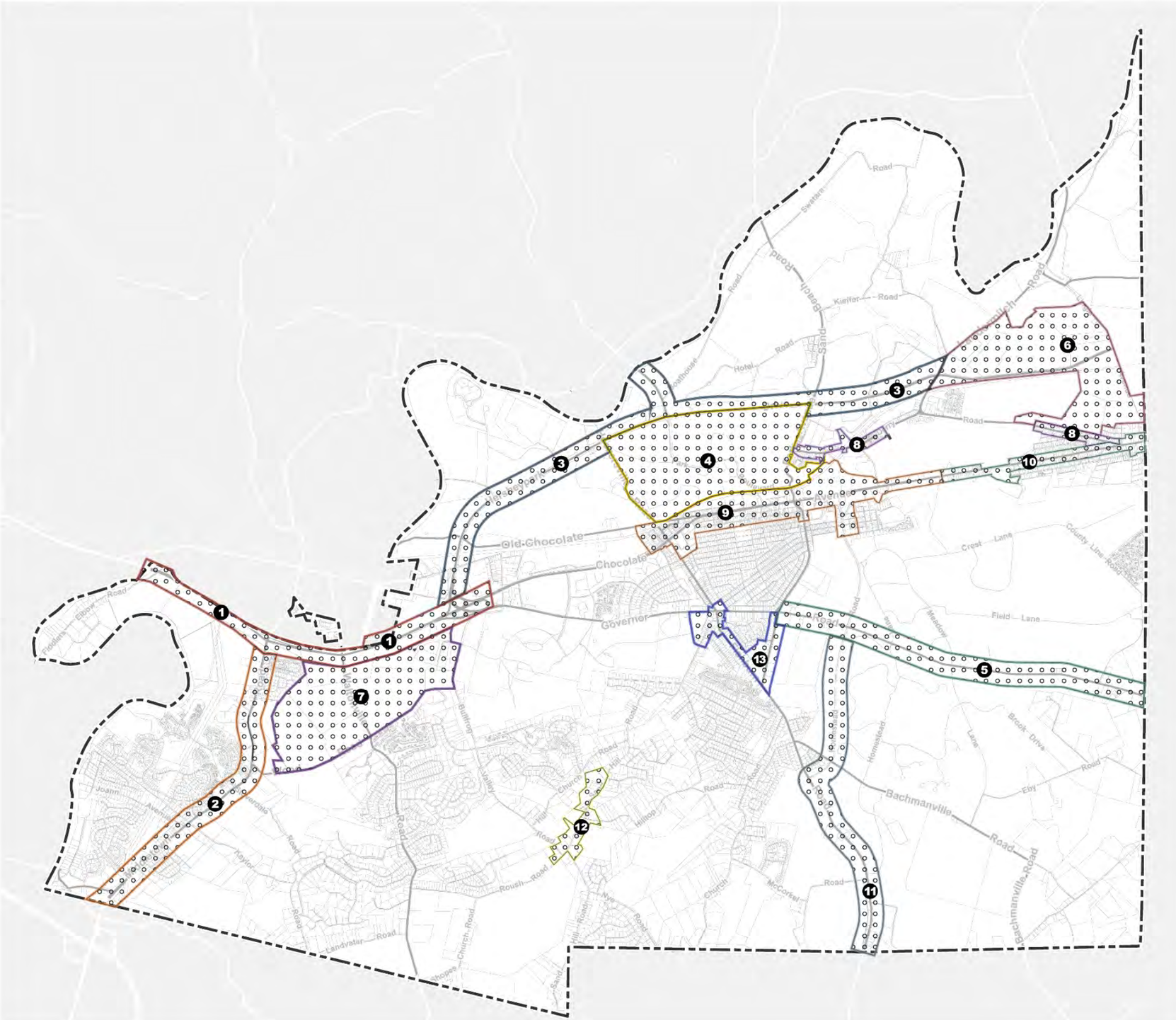

Legend

- Derry Township
- Surrounding Municipalities
- Highways
- Other Roads
- 1 Route 322/422
- 2 Middletown Road
- 3 Hersheypark Drive/Route 39
- 4 Hersheypark
- 5 Governor Road
- 6 Palmdale Future Development Area
- 7 Bullfrog Valley/Middletown Roads Future Development Area
- 8 Derry Road
- 9 Downtown Core
- 10 East Chocolate Avenue
- 11 Homestead/Fishburn Roads
- 12 Sandhill Road
- 13 Southern Core

OFFICIAL ZONING MAP - 2

Thoroughfares Overlay

NORTH

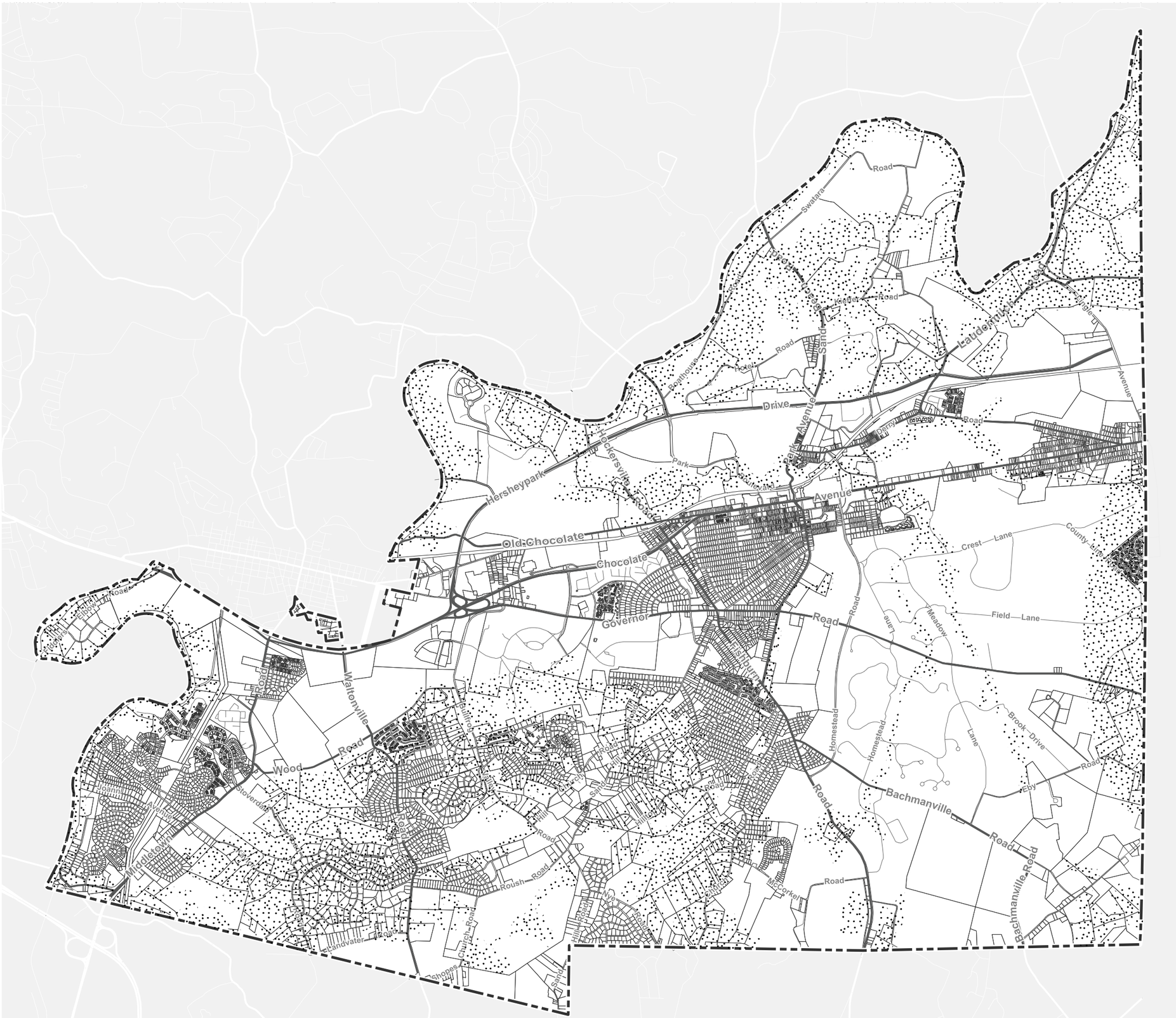
Hersheypark
Old Chocolate
Chocolate
Governor
Road
Waltonville
Wood
Road
Bachmanville
Road
Bachmanville Road
Avenue
Park
Drive
Hockersville
Road
Swatara
Road
Lauderkirk
Road
Crest
Lane
County
Line
Field
Lane
Meadow
Lane
Brook
Drive
Homestead
Homestead
Lane
Middletown
Road
Roush
Road
Church
Road
Landvater
Road
Schopes
Road
Sandy
Hill
Road
Kieder
Road
Boothouse
Road
Hotel
Road
Sandy
Hill
Road
Park
Avenue
Hershey
Road
Avenue
Derry
Road
Avenue
Lauderkirk
Road
Avenue
Cloverdale
Road
Railroad
Road
Hillsburg
Road
Hillsburg
Road
Hillsburg

from 5-4-16
public release

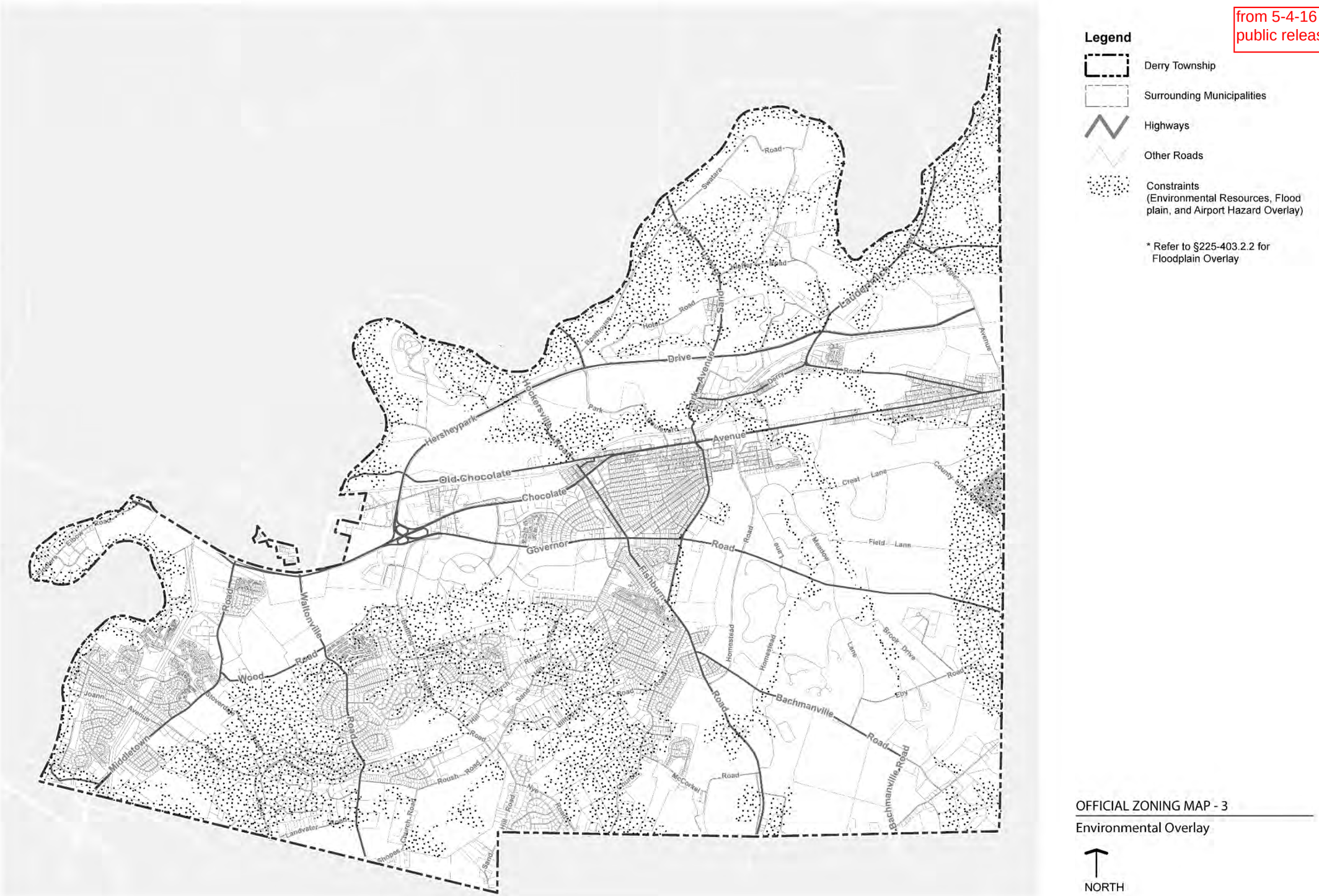

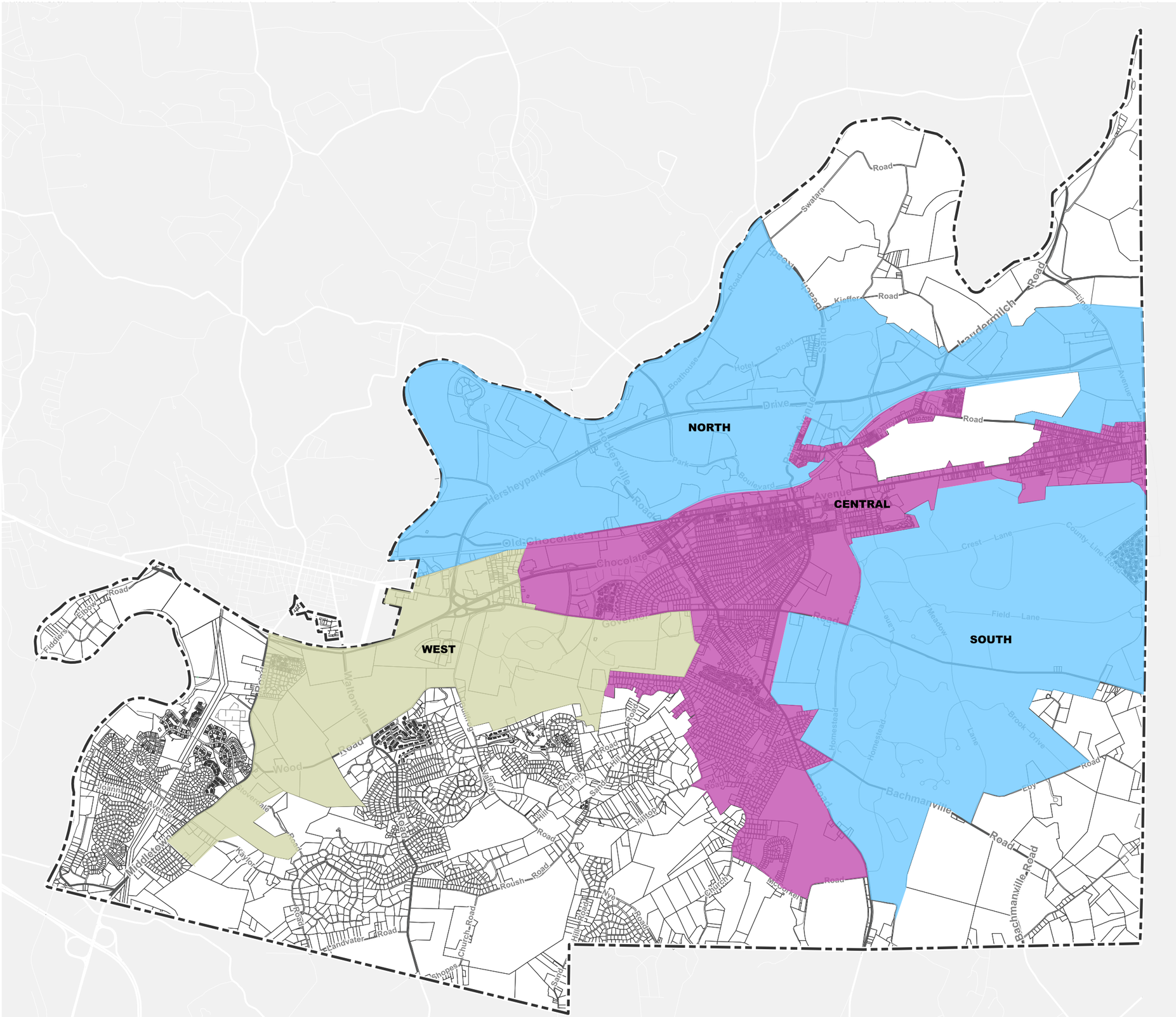

Legend

9-7-16 release

- Derry Township
- Surrounding Municipalities
- Highways
- Other Roads
- Central Master Plan Approval Area
- North/South Master Plan Approval Area
- West Master Plan Approval Area

OFFICIAL ZONING MAP - 4

Development Approval Areas Overlay

NORTH

from 5-4-16 public release

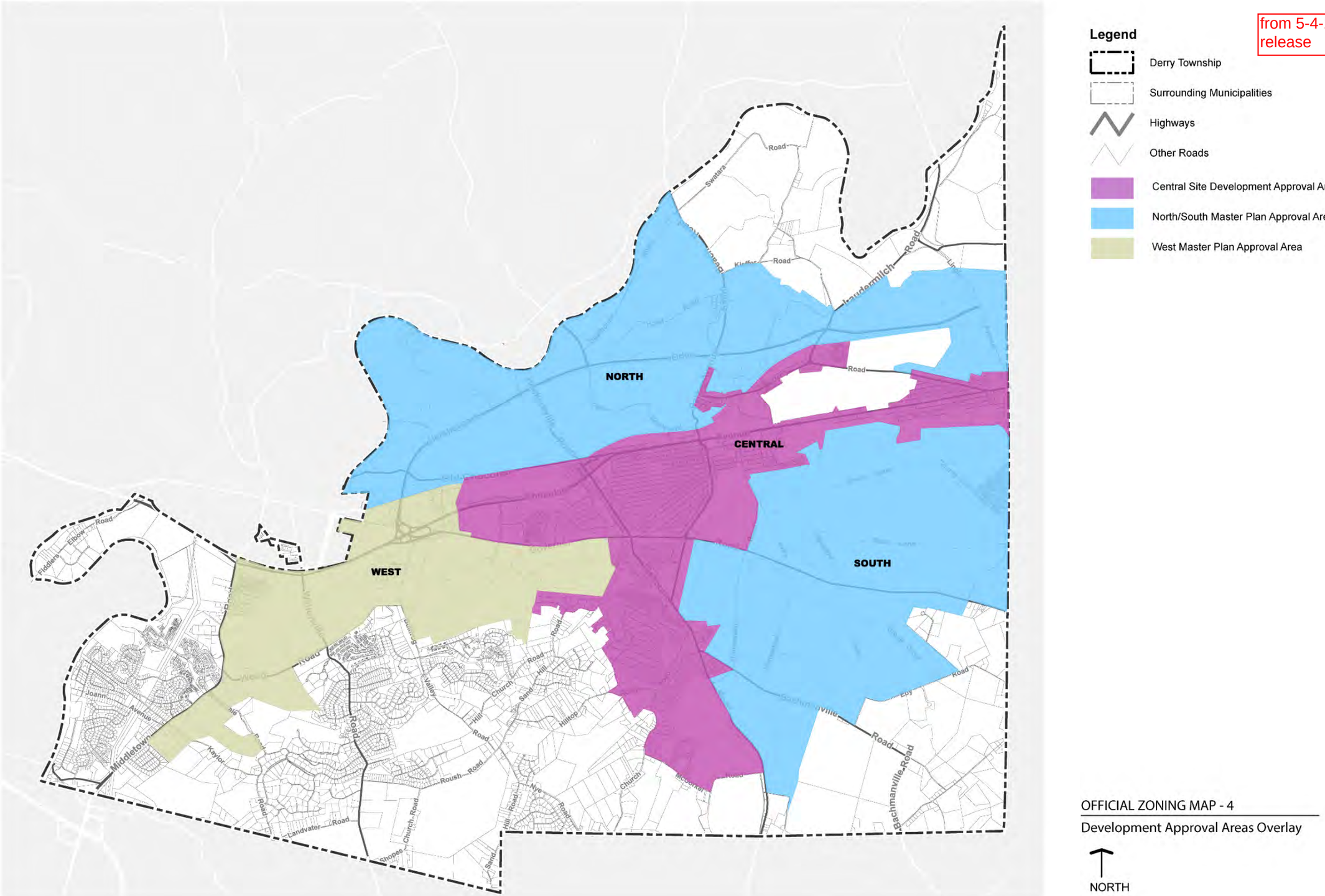

OFFICIAL ZONING MAP - 4

Development Approval Areas Overlay

NORTH

§ 225-303 Conservation

Map 5: Zoning District - Conservation

Overlays

- Environmental
- 1 Community Heritage Buffer
- 2 Middletown Road
- 3 Hersheypark Drive/ Route 39
- 5 Governor Road
- 11 Homestead/Fishburn Roads
- 12 Sandhill Road
- 7 Planned Campus West Future Development Area

Approval Areas

- b North/SouthMaster Plan Approval Area
- C West Master Plan Approval Area

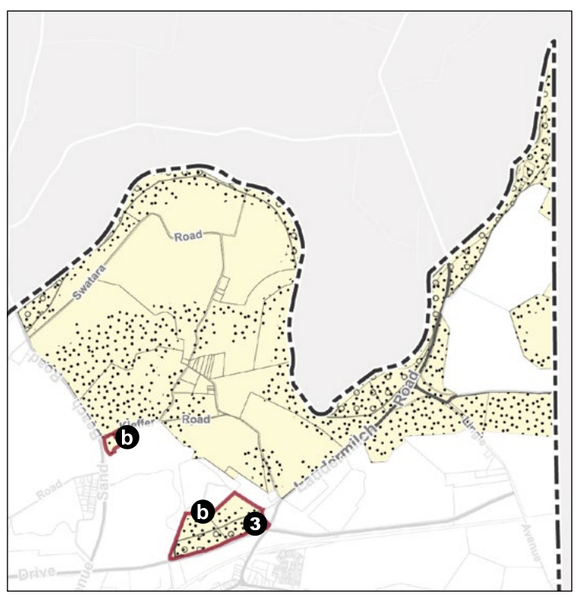

Figure 1: Conservation Lot Dimensional Diagram

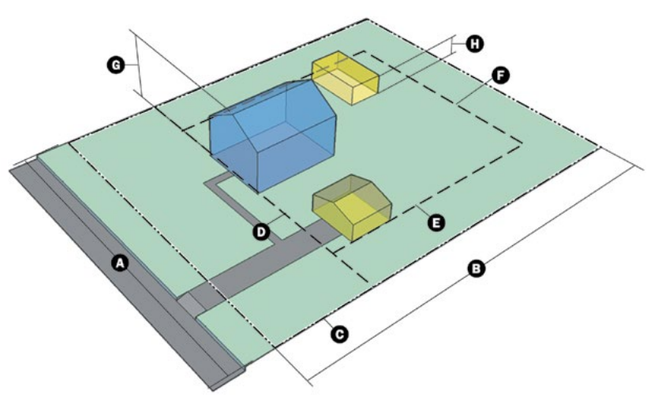

Table 5: Conservation Dimensions

A	Minimum Lot Width (FT)			200
B	Minimum Lot Depth (FT)			200
C	Minimum Non-res. Lot Area			5 ac
SETBACKS (FT)	PRINCIPAL STRUCTURE	D Front	Min	50
			Max	N/A
		E Side	Min	50
		F Rear	Min	50
	ACCESSORY (minimum)		Front	50
			Side	50
			Rear	50
MAX HEIGHT (FT)	G Principal Structure			45
	H Accessory Structure			20
Maximum Impervious Coverage				15 %
Minimum Vegetated Coverage				75%
Maximum Residential Density				1 DU/ 5 NDA

No more than 25% of existing trees that contain a caliper of 18 inches or more shall be removed during construction activities on a property in this District. Such trees shall be identified prior to any proposed tree removal. Any forestry activity approved by State measures shall not be required to comply with this requirement.

9-7-16 release

Table 4: Conservation Uses

Residential Uses		
Single-family Detached Dwelling	P	
Bed & Breakfast Home	P	
Farm Home Occupation	P	
Family Child Care Home	SE	§502.3
Home Occupations	P	
No-Impact Home Based Business	P	
Accessory Dwelling Units	SE	§502.9
Commercial Uses		
Auction Houses	O12	
Business and Professional Offices	O12	
Communications Antenna, Building-mounted	P	
Communications Antenna, Towers < 50 ft	P	
Communications Antenna, Towers > 50 ft	SE	§502.5
Communications Antenna, Co-located	P	
Conference & Meeting Center	SE	§502.6
Horse Riding Stables & Facilities, No Horse Racing	P	
Kennel	P	
Landscape and Garden Service - non-retail	P	
Recreational, Sports and Entertainment Facilities		
Botanical Gardens	C	§501.21
Archery & Shooting Ranges, Indoor	C	§501.22
Country Club	C	§501.26
Golf Courses (Conventional & Special)	C	§501.27
Zoos	C	§501.28
Winery	C	§501.10
Industrial Uses		
Group Home for Persons with Disabilities	C	§501.35
Group Home for Persons without Disabilities	C	§501.35
Place of Worship/Place of Assembly	P	
Schools	P	
Municipal/Public Uses		
Administrative Offices of County, State or Federal Government (Office)	C	§501.46
Libraries	P	
Municipal Buildings and Uses	P	
Fire/Emergency Services	P	
Parks, Playgrounds & Recreation	P	
Utility Service Structures	P	
Agricultural/Conservation Uses		
Agricultural Uses	P	
Cemeteries	P	
Conservation Areas & Uses	P	
Miscellaneous		
Uses similar to specified permitted uses	C	§501.40
Unique Buildings	C	§501.44
Cluster Development Option	C	§501.43
Wind Energy Conversion Systems (Principal Use)	P	
Solar Panel Arrays (Principal Use)	P	

from 5-4-16 public release

§225-303 Conservation.

Table 4: Conservation Uses

Residential Uses		
Single-family Detached Dwelling	P	
Bed & Breakfast Home	P	
Farm Home Occupation	P	
Family Child Care Home	SE	§502.3
Commercial Uses		
Auction Houses	O12	
Business & Professional Offices	O12	
Communications Antenna, Building-mounted	P	
Communications Antenna, Towers < 50	P	
Communications Antenna, Towers > 50	SE	§502.5
Communications Antenna, Co-located	P	
Conference & Meeting Centers	SE	§502.6
Horse Riding Stables & Facilities, excluding Horse Racing	P	
Kennel	P	
Landscape & Garden Service - non-retail	P	
Recreational, Sports & Entertainment Facilities (Private)		
Arboretums & Botanical Gardens	C	§501.21
Archery & Shooting Ranges	C	§501.22 and.23
Country Club	C	§501.26
Golf Courses (Conventional & Special)	C	§501.27
Zoos	C	§501.28
Winery	C	§501.10
Industrial Uses		
Mineral Extraction	P	
Institutional Uses		
Group Home for Persons with Disabilities	C	§501.35
Group Home for Persons without Disabilities	C	§501.35
Place of Worship/Place of Assembly	P	
Schools	P	
Municipal/Public Uses		
Administrative Offices Of County, State or Federal Government (Office)	C	§501.46
Libraries	P	
Municipal Buildings/Uses	P	
Fire/Emergency Services	P	
Parks, Playgrounds & Recreation	P	
Utility Service Structures	P	
Utility Administration Facilities (Office)	P	
Agricultural/Conservation Uses		
Agricultural Uses	P	
Cemeteries	P	
Conservation Areas & Uses	P	

Accessory Uses: ~~Accessory Dwelling; Carport; Family Day Care (Youth/Adult); Satellite Antenna; Essential Services; Home-based Business, No Impact; Public Off-Street Parking Lot; Private Off-Street Parking Spaces; Outdoor Wood Furnace; Solar Collectors and Solar-related Equipment; Swimming Pools; Wind Energy Conservation Systems~~

Note: Uses Similar to Specified Permitted Uses and Unique Buildings and Cluster Development Option available by Conditional Use Approval

Map 5: Zoning District Map - Conservation

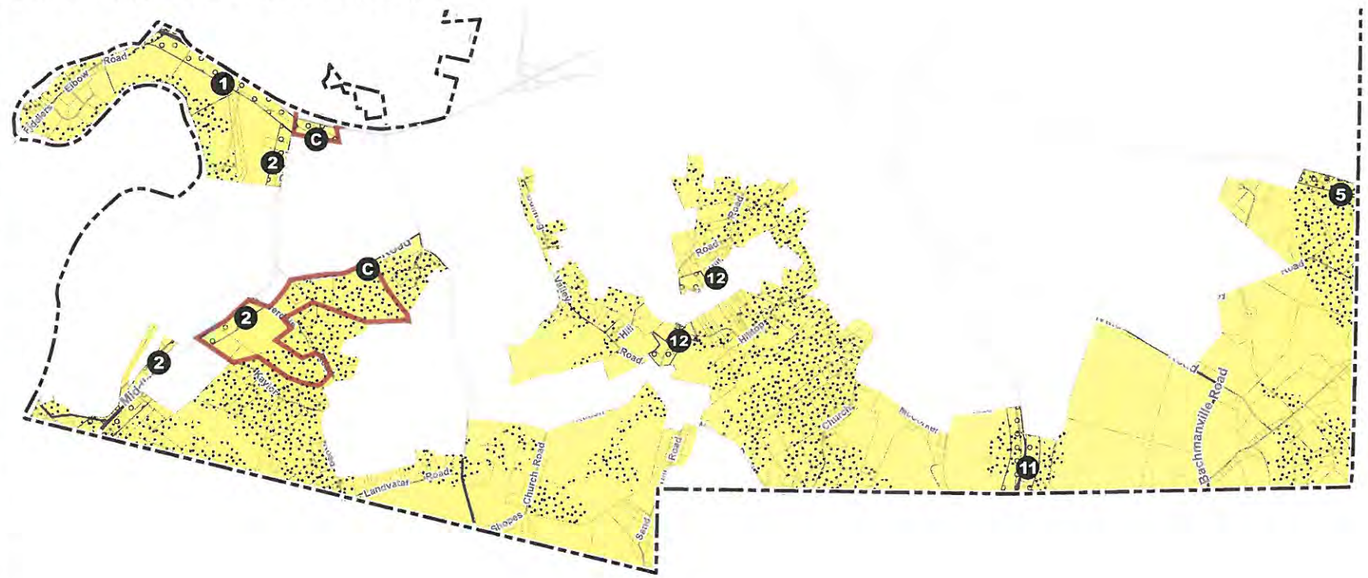

Table 5: Conservation Dimensions[1]

A	Minimum Lot Width (FT)			
B	Minimum Lot Depth			200
C	Minimum Nonres. Lot Area			5 ac
SETBACKS (FT)	PRINCIPAL STRUCTURE D E F	Front	MIN	50
			MAX	N/A
		Side	MIN	50
		Rear	MIN	50
	Accessory (Minimum)		FRONT	50
			SIDE	50
			REAR	50
MAX HEIGHT (FT)	G PRINCIPAL STRUCTURE			45
	H ACCESSORY STRUCTURE			20
Maximum Impervious Coverage				15%
MINIMUM VEGETATIVE COVER				75%

Figure 1: Conservation Lot Dimensional Diagram

MAX. RESIDENTIAL DENSITY 1 DU/NDA

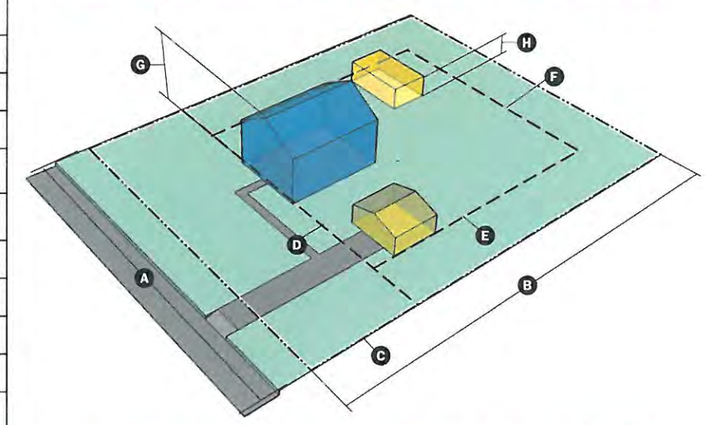

1. SEE 225-206.F FOR EXCEPTIONS

§ 225-304 R-1 Larger Lot, Single-Family Residential

Map 6: Zoning District - R-1 Residential

Overlays

Environmental Overlays

12 Sandhill Road

Table 6: R-1 Residential Uses

Residential Uses		
Single-family Detached Dwelling	P	
Bed & Breakfast Home	C	§501.13
Farm Home Occupation	SE	§502.2
Family Child Care Home	SE	§502.3
Private Community Facilities/Recreation Areas	P	
Home Occupations	P	
No-Impact Home Based Business	P	
Accessory Dwelling Units	SE	§502.9
Commercial Uses		
Auction Houses	O12	
Business and Professional Offices	O12	
Communications Antenna, Towers < 50 ft	P	
Communications Antenna, Co-located	P	
Institutional Uses		
Place of Worship/Place of Assembly	P	
Schools	P	
Municipal/Public Uses		
Administrative Offices of County, State or Federal Government (Office)	C	§501.46
Libraries	P	
Municipal Buildings and Uses	P	
Fire/Emergency Services	P	
Parks, Playgrounds & Recreation	P	
Utility Service Structures	P	
Agricultural/Conservation Uses		
Agricultural Uses	P	
Conservation Areas & Uses	P	
Miscellaneous		
Uses similar to specified permitted uses	C	§501.40
Unique Buildings	C	§501.44
Cluster Development Option	C	§501.43

Table 7: R-1 Residential Dimensions

A	Minimum Lot Width (FT)			125
B	Minimum Lot Depth (FT)			150
C	Minimum Non-res. Lot Area			1 ac
SETBACKS (FT)	PRINCIPAL STRUCTURE	D Front	Min	30
			Max	N/A
		E Side	Min	15
		F Rear	Min	30
	ACCESSORY (minimum)		Front	50
			Side	10
			Rear	10
MAX HEIGHT (FT)	G Principal Structure			35
	H Accessory Structure			20
Maximum Impervious Coverage				30%
Minimum Vegetated Coverage				60%
Maximum Residential Density				2 DU/ NDA

§ 225-305 R-2 Small Lot, Single-Family Residential

9-7-16 release

Map 7: Zoning District - R-2 Residential

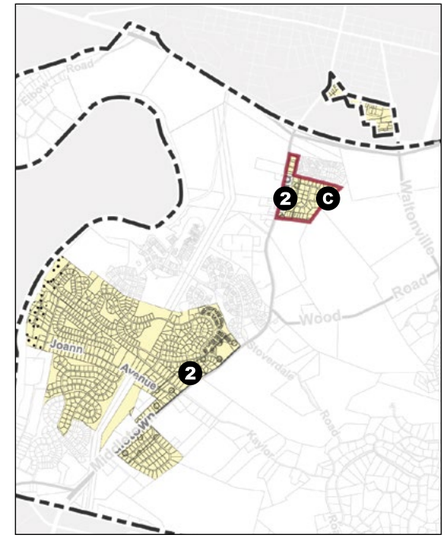

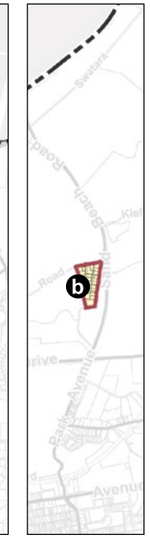

Overlays

Environmental Overlays

2 Middletown Road

Approval Areas

b North/SouthMaster Plan Approval Area

c West Master Plan Approval Area

Table 8: R-2 Residential Uses

Residential Uses		
Single-family Detached Dwelling	P	
Single Family Conversion	C	§501.1
Farm Home Occupation	SE	§502.2
Family Child Care Home	SE	§502.3
Private Community Facilities/Recreation Areas	P	
Home Occupations	P	
No-Impact Home Based Business	P	
Accessory Dwelling Units	SE	§502.9
Commercial Uses		
Communications Antenna, Towers < 50 ft	P	
Communications Antenna, Co-located	P	
Institutional Uses		
Group Home for Persons with Disabilities	C	§501.35
Place of Worship/Place of Assembly	P	
Schools	P	
Municipal/Public Uses		
Administrative Offices of County, State or Federal Government (Office)	C	§501.46
Libraries	P	
Municipal Buildings and Uses	P	
Fire/Emergency Services	P	
Parks, Playgrounds & Recreation	P	
Utility Service Structures	P	
Agricultural/Conservation Uses		
Agricultural Uses	P	
Conservation Areas & Uses	P	
Miscellaneous		
Uses similar to specified permitted uses	C	§501.40
Unique Buildings	C	§501.44
Cluster Development Option	C	§501.43
Affordable Housing Density Option	P	

Table 9: R-2 Residential Dimensions

A	Minimum Lot Width (FT)			100
B	Minimum Lot Depth (FT)			150
C	Minimum Non-res. Lot Area			1 ac
SETBACKS (FT)	PRINCIPAL STRUCTURE	D Front	Min	25
			Max	N/A
		E Side	Min	15
		F Rear	Min	30
	ACCESSORY (minimum)		Front	50
			Side	10
			Rear	10
MAX HEIGHT (FT)	G Principal Structure			35
	H Accessory Structure			20
Maximum Impervious Coverage				30%
Minimum Vegetated Coverage				60%
Maximum Residential Density				3 DU/ NDA

Figure 2: R-1, R-2 Residential Lot Dimensional Diagram

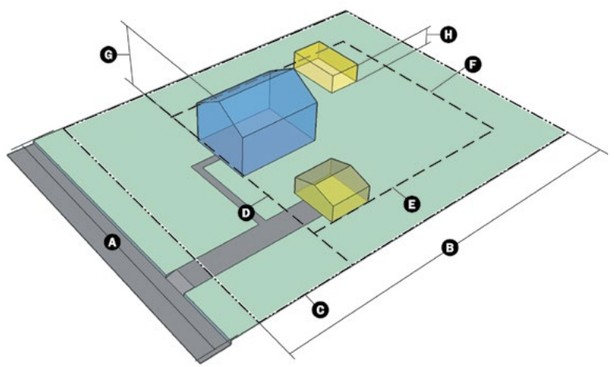

from 5-4-16 public release

§225 304 R-1 Larger Lot, Single-Family Residential.

Table 6: R-1 Residential Land Uses

Residential Uses		
Single-family Detached Dwelling	P	
Bed & Breakfast Home	C	§501.3
Farm Home Occupation	SE	§502.2
Family Child Care Home	SE	§502.3
Private Community Facilities/Recreation	P	
Commercial Uses		
Auction Houses	O12	
Communications Antenna, Towers < 50	P	
Communications Antenna, Co-located	P	
Place of Worship/Place of Assembly	P	
Schools	P	
Municipal/Public Uses		
Administrative Offices Of County, State or Federal Government (Office)	C	§501.46
Libraries	P	
Municipal Buildings/Uses	P	
Fire/Emergency Services	P	
Parks, Playgrounds & Recreation	P	
Utility Service Structures	P	
Agricultural/Conservation Uses		
Agricultural Uses	P	
Conservation Areas & Uses	P	

Map 6: Zoning District Map - R-1 Residential

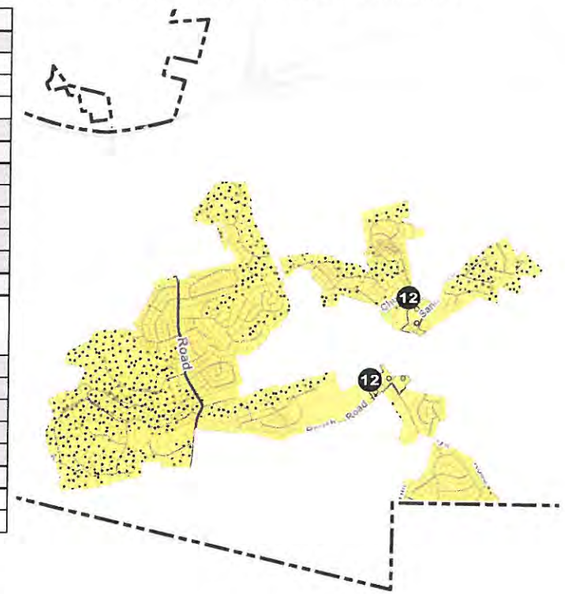

Overlays

Environmental Overlays

Sand Hill Road

~~**Accessory Uses**: Accessory Dwelling; Carport; Family Day Care (Youth/Adult); Satellite Antenna; Essential Services; Home-based Business, No Impact; Parking Lot, Public Off-Street; Parking Space(s), Private Off-Street; Solar Collectors and Solar-related Equipment; Swimming Pools; Wind Energy Conversion Systems~~

Note: Uses Similar to Specified Permitted Uses and Unique Buildings and Cluster Development Option available by Conditional Use Approval

Table 7: R-1 Residential Dimensions

A	Minimum Lot Width (FT)			125
B	Minimum Lot Depth (FT)			150
C	Minimum Lot Area NON RESID			1 ac
SETBACKS (FT)	PRINCIPAL STRUCTURE	D Front	MIN	30
			MAX	N/A
		E Side	MIN	~~20~~ 15'
		F Rear	MIN	30
	ACCESSORY ~~PARKING~~ (Minimum)		FRONT	~~10~~ 50'
			SIDE	~~5~~ 10'
			REAR	10
MAX HEIGHT (FT)	G PRINCIPAL STRUCTURE			35
	H ACCESSORY STRUCTURE			20
Maximum Impervious Coverage				30%
MIN. VEGETATIVE COVER				60%

Figure 2: R-1 Residential Lot Dimensional Diagram

MAX RES. DENSITY 2 DU/NDA

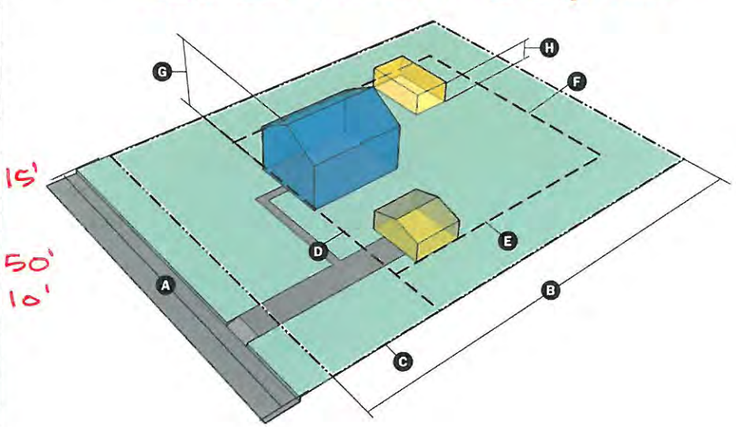

from 5-4-16 public release

§225-305 R-2 Small Lot, Single-Family Residential.

Table 8: R-2 Residential Uses

Residential/Commercial Uses		
Single-family Detached Dwelling	P	
Single Family Conversion	C	§501.1
Farm Home Occupation	SE	§502.2
Family Child Care Home	SE	§502.3
Private Community Facilities/Recreation Areas	P	
Communications Antenna, Towers ≤ 50 feet in height	P	
Communications Antenna, Co-located	P	
Institutional Uses		
Group Home for Persons with Disabilities	C	§501.35
Place of Worship/Place of Assembly	P	
Schools	P	
Municipal/Public Uses		
Administrative Offices Of County, State or Federal Government (Office)	C	§501.46
Libraries	P	
Municipal Buildings/Uses	P	
Fire/Emergency Services	P	
Parks, Playgrounds & Recreation	P	
Utility Service Structures	P	
Agricultural/Conservation Uses		
Agricultural Uses	P	
Conservation Areas & Uses	P	

~~**Accessory Uses**: Accessory Dwelling; Carport; Family Day Care (Youth/Adult); Satellite Antenna; Essential Services; Home-based Business, No Impact; Parking Lot, Public Off-Street; Parking Space(s), Private Off-Street; Solar Collectors and Solar-related Equipment; Swimming Pools; Wind Energy Conversion Systems~~

Note: Uses Similar to Specified Permitted Uses and Unique Buildings and Cluster Development Option available by Conditional Use Approval

Map 7: Zoning District Map - R-2 Residential

Overlays

Environmental Overlays

2 Middletown Road

Development Approval Area

b North/South Master Plan Approval Area

c West Master Plan Approval Area

Table 9: R-2 Residential Dimensions

A Minimum Lot Width (FT)			~~125~~	100'
B Minimum Lot Depth (FT)			150	
C Minimum Lot Area NON RESID.			1 ac	
SETBACKS (FT)	PRINCIPAL STRUCTURE	D Front	MIN	25
			MAX	N/A
		E Side	MIN	15
		F Rear	MIN	30
	ACCESSORY PARKING (Minimum)		FRONT	~~10~~ 50'
			SIDE	~~5~~ 10'
			REAR	10
MAX HEIGHT (FT)	G PRINCIPAL STRUCTURE			35
	H ACCESSORY STRUCTURE			20
Maximum Impervious Coverage				30%
MIN. VEGETATIVE COVER				60%

MAX. RES. DENSITY 3DU/NDA

Figure 3: R-2 Residential Lot Dimensional Diagram

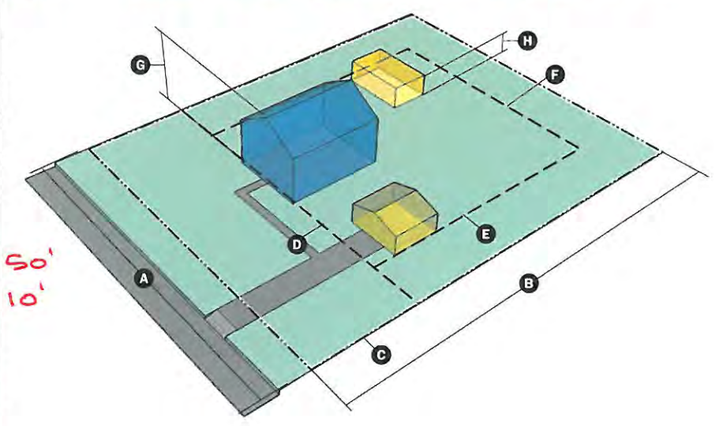

9-7-16 release

§ 225-306 R-3 Small Lot, Mixed Residential

Map 8: Zoning District - R-3 Residential

Overlays

- Environmental Overlays
- 1 Community Heritage Buffer
- 2 Middletown Road

Approval Areas

- b North/SouthMaster Plan Approval Area
- c West Master Plan Approval Area

Figure 3: R-3 Residential Lot Dimensional Diagram

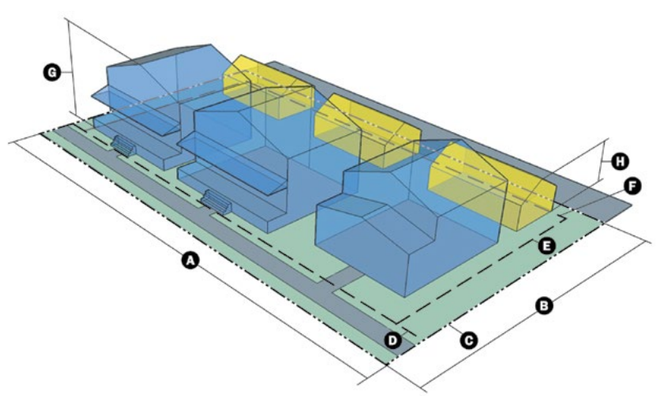

Table 11: R-3 Residential Dimensions

				Residential			
				SFDD/ TFDD	SFSD	SFAD	APT.
A Minimum Non-Res. Lot Width (FT)			125	80	40	20	125
B Minimum Non-Res. Lot Depth (FT)			150	120	120	140	150
C Minimum Non-Res. Lot Area			1 ac				
SETBACKS (FT)	PRINCIPAL STRUCTURE	D Front	Min	25/35[1]	25	25	25	25
			Max	N/A				
		E Side	Min	12/35[1]	10	10 (1 side)	10 (ends)	15
		F Rear	Min	35	30	30	35	30
	ACCESSORY (minimum)		Front	50				
			Side	10				
			Rear	10				
MAX HEIGHT (FT)	G Principal Structure			40				
	H Accessory Structure			20				
Maximum Impervious Coverage				50%				
Minimum Vegetated Coverage				40%				
RESIDENTIAL DENSITY	SFDD/SFSD/TFDD			5.5 DU/ NDA				
	SFAD (townhouse)			8 DU/ NDA				
	Apartments			12 DU/ NDA				
	Senior Apartments			15 DU/ NDA				

Table 10: R-3 Residential Uses

Residential Uses		
Single-family Detached Dwelling	P	
Single-family Semidetached Dwelling	P	
Single-family Attached Dwelling (Townhouse)	P	
Single Family Conversion	C	§501.1
Two-family Detached Dwelling	P	
Multifamily Apartment Dwellings	P	
Farm Home Occupation	SE	§502.2
Family Child Care Home	SE	§502.3
Mobile Home Park	C	§501.5
Private Community Facilities/Recreation Areas	P	
Home Occupations	P	
No-Impact Home Based Business	P	
Accessory Dwelling Units	SE	§502.9
Commercial Uses		
Communications Antenna, Towers < 50 ft	P	
Communications Antenna, Co-located	P	
Institutional Uses		
Place of Worship/Place of Assembly	P	
Schools	P	
Municipal/Public Uses		
Administrative Offices of County, State or Federal Government (Office)	C	§501.46
Libraries	P	
Municipal Buildings and Uses	P	
Fire/Emergency Services	P	
Parks, Playgrounds & Recreation	P	
Utility Service Structures	P	
Agricultural/Conservation Uses		
Agricultural Uses	P	
Conservation Areas & Uses	P	
Miscellaneous		
Uses similar to specified permitted uses	C	§501.40
Unique Buildings	C	§501.44
Cluster Development Option	C	§501.43

from 5-4-16
public release

§225-306 R-3 Small Lot, Mixed Residential.

Table 10: R-3 Residential Uses

Residential Uses		
Single-family Detached Dwelling	P	
Single-family Semidetached Dwelling	P	
Single-family Attached Dwelling (Townhouse)	P	
Single Family Conversion	C	§501.1
Two-family Detached Dwelling	P	
Multifamily Apartment Dwellings	P	
Farm Home Occupation	SE	§502.2
Family Child Care Home	SE	§502.3
Mobile Home Park	C	§501.5
Private Community Facilities/Recreation Areas	P	
Commercial Uses		
Communications Antenna, Towers ≤ 50 feet in height	P	
Communications Antenna, Co-located	P	
Institutional Uses		
Place of Worship/Place of Assembly	P	
Schools	P	
Municipal/Public Uses		
Administrative Offices Of County, State or Federal Government (Office)	C	§501.46
Libraries	P	
Municipal Buildings/Uses	P	
Fire/Emergency Services	P	
Parks, Playgrounds & Recreation	P	
Utility Service Structures	P	
Agricultural/Conservation Uses		
Agricultural Uses	P	
Public/Private Conservation Areas & Uses	P	

~~**Accessory Uses**: Accessory Dwelling; Car Wash; Carport; Family Day Care (Youth/Adult); Satellite Antenna; Essential Services; Home-based Business, No Impact; Home Occupation; Parking Lot, Private Off-Street; Parking Lot, Public Off-Street; Parking Space(s), Private Off-Street; Solar Collectors and Solar-related Equipment; Swimming Pools; Wind Energy Conversion Systems~~

Note: Uses Similar to Specified Permitted Uses and Unique Buildings and Cluster Development Option available by Conditional Use Approval

Map 8: Zoning District Map - R-3 Residential

Overlays

Environmental Overlays

Middletown Road

Development Approval Area

~~North~~/South Master Plan Approval Area

West Master Plan Approval Area

RESIDENTIAL DIMENSIONS	SFDD & TFDD	SFSD	SFAD	APARTMENT
FRONT	25	25	25	25
SIDE	10	10 (1 side)	10 (ends)	15
REAR	30	30	35	30
MIN. LOT WIDTH	80	40	20	125
MIN. LOT DEPTH	120	120	140	150

Table 11: R-3 Residential Dimensions

A	Minimum Lot Width (FT) NON RES			125
B	Minimum Lot Depth (FT) NON RES			150
C	Minimum Lot Area NON RES			1 ac
SETBACKS (FT)	PRINCIPAL STRUCTURE	D Front	MIN	25/35[1]
			MAX	N/A
		E Side	MIN	12/35[1]
		F Rear	MIN	35
	~~PARKING~~ ACCESSORY (Minimum)		FRONT	~~10~~ 50'
			SIDE	5
			REAR	10
MAX HEIGHT (FT)	G PRINCIPAL STRUCTURE			40
	H ACCESSORY STRUCTURE			20
Maximum Impervious Coverage				~~30%~~ 50%
MIN. VEGETATIVE COVER				40%

Figure 4: R-3 Residential Lot Dimensional Diagram

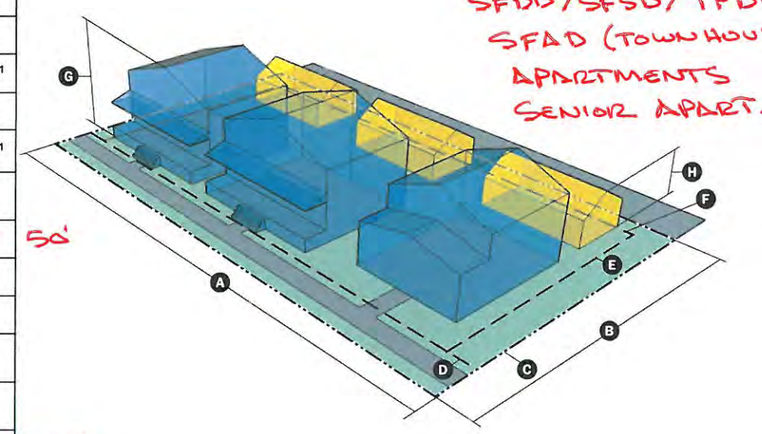

RESIDENTIAL DENSITY

SFDD/SFSD/TFDD	5.5 DU/NDA
SFAD (TOWNHOUSE)	8 DU/NDA
APARTMENTS	12 DU/NDA
SENIOR APART.	15 DU/NDA

§ 225-307 General Commercial

Map 9: Zoning District - General Commercial

Overlays

- Environmental Overlays
- 1 Community Heritage Buffer
- 3 Hersheypark Drive/ Route 39

Approval Areas

- a Central Master Plan Approval Area
- b North/SouthMaster Plan Approval Area
- c West Master Plan Approval Area

Table 13: General Commercial Dimensions

A	Minimum Lot Width (FT)			100
B	Minimum Lot Depth (FT)			150
C	Minimum Lot Area			N/A
SETBACKS (FT)	PRINCIPAL STRUCTURE	D Front	Min	25
			Max	N/A
		E Side	Min	15
		F Rear	Min	35
MAX HEIGHT (FT)	G Principal Structure			40
	H Accessory Structure			20
Maximum Impervious Coverage				60%
Minimum Vegetated Coverage				30%

Figure 4: General Commercial Lot Dimensional Diagram

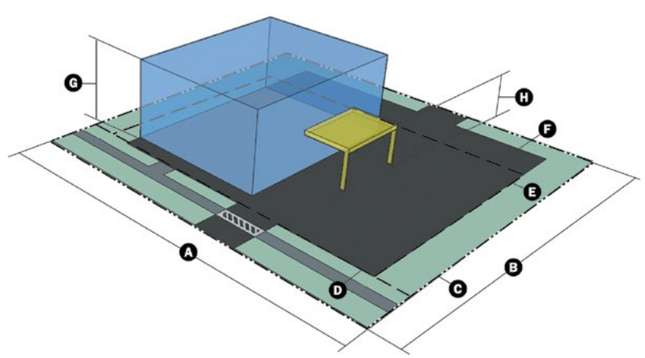

§ 225-307 General Commercial

9-7-16 release

Table 12: General Commercial Uses

Residential Uses		
Single-family Detached Dwelling	P	
Boarding Home	P	
Farm Home Occupation	SE	§502.2
Private Community Facilities/Recreation Areas	P	
No-Impact Home Based Business	P	
Accessory Dwelling Units	SE	§502.9
Commercial Uses		
Auction Houses	P	
Automobile and Truck Leasing/Rental	P	
Automotive Car Wash/Lubrication Facilities	P	
Bakery, Retail	P	
Business and Professional Offices	P	
Cigar, Hookah, and/or Vapor Lounge	C	§501.7
Commercial Laundry	P	
Communications Antenna, Building-mounted	P	
Communications Antenna, Towers < 50 ft	P	
Communications Antenna, Towers > 50 ft	SE	§502.5
Communications Antenna, Co-located	P	
Dry Cleaning Service, Retail	P	
Financial Institutions	P	
Food Catering	P	
Food Services Without Drive-Through	P	
Food Services With Drive-Through	P	
Fuel Service - Minor	P	
Fuel Service - Major	P	
Funeral Homes	P	
Guest Lodging, Dining and Conference Facilities	P	
Healthcare Practitioners Office	P	
Hotels and Motels	P	
Kennel	P	
Landscape and Garden Service - non-retail	P	
Landscaping and Garden Center - retail	P	
Laundromat	P	
Membership Club	SE	§502.8
Micro-distilleries/Breweries	P	
Motor Vehicle Repair Garages	P	
Motor Vehicle Sales and Service	P	
Mixed Use Building	P	
Outpatient Medical Treatment Facilities	P	
Personal Service Establishments	P	
Pet Grooming Facilities	P	
Photocopy Service	P	
Recreational, Sports and Entertainment Facilities		
Bowling Alleys	P	
Exercise & Fitness Centers	P	
Sport & Field Complexes	P	
Zoos	P	

Commercial Uses		
Residence Hotels and Motels	P	
Retail, Large-Scale	P	
Retail, Small-Scale	P	
Service and Repair Facilities	P	
Specialty Home	C	§501.20
Studios/Gallery for Teaching, Dancing, Art, Music or Similar Cultural Pursuits	P	
Taxidermy	C	§501.30
Theater and Auditorium	P	
Veterinary Office	P	
Veterinary Hospital	P	
Winery	P	
Institutional Uses		
Group Child Care Facilities	P	
Hospital	P	
Museums	P	
Place of Worship/Place of Assembly	P	
Schools	P	
Municipal/Public Uses		
Administrative Offices of County, State or Federal Government (Office)	P	
Libraries	P	
Municipal Buildings and Uses	P	
Fire/Emergency Services	P	
Parks, Playgrounds & Recreation	P	
Utility Service Structures	P	
Agricultural/Conservation Uses		
Agricultural Uses	P	
Conservation Areas & Uses	P	
Miscellaneous		
Uses similar to specified permitted uses	C	§501.40
Unique Buildings	C	§501.44

from 5-4-16
public release

§225-308 General Commercial.

Table 14: General Commercial Uses

Residential Uses		
Boarding Home	P	
Farm Home Occupation	SE	§502.2
Private Community Facilities/Recreation Areas	P	
Commercial Uses		
Auction Houses	P	
Automobile & Truck Leasing/Rental	P	
Automotive Car Wash/Lubrication Facilities	P	
Business & Professional Offices	P	
Cigar, Hookah, and/or Vapor Lounge	C	§501.7
Commercial Laundry	P	
Communications Antenna, Building-	P	
Communications Antenna, Towers < 50	P	
Communications Antenna, Towers > 50	SE	§502.5
Communications Antenna, Co-located	P	
Bakery, Retail	P	
Dry Cleaning Service, Retail	P	
Food Services Without Drive-Thru	P	
Food Services With Drive-Thru	C	§501.9
Food Trucks	P	
Micro-distilleries/Breweries	P	
Food Catering	P	
Funeral Homes	P	
Guest Lodging, Dining & Conference	P	
Healthcare Practitioners Office	P	
Hotels and Motels	P	
Kennel	P	
Landscape & Garden Service -- non-retail	P	
Landscaping & Garden Center -- retail	P	
Laundromat	P	
Membership Club	SE	§502.8
Motor Vehicle Repair Garages	P	
Motor Vehicle Sales & Service	P	
Mixed Use Building	P	
Outpatient Medical Treatment Facilities	P	
Personal Service Establishments	P	
Pet Grooming Facilities	P	
Photocopy Service	P	
Residence Hotels & Motels	P	
Fuel Service – Minor and Major	P	
Service & Repair Facilities	P	
Specialty Home	C	§501.20
Recreational, Sports & Entertainment Facilities (Private)		
Bowling Alleys	P	
Exercise & Fitness Centers	P	
Sport & Field Complexes	P	
Zoos	P	
Retail, Large-Scale	P	
Retail, Small-Scale	P	
Studios/Gallery for Teaching, Dancing, Art, Music or Similar Cultural Pursuits	P	
Taxidermy	C	§501.30
Theater & Auditorium	P	
Veterinary Office	P	
Veterinary Hospital	P	
Winery	P	
Institutional Uses		
Group Child Care Facilities	P	
Hospital	P	
Museums	P	
Place of Worship/Place of Assembly	P	
Schools	P	
Municipal/Public Uses		
Administrative Offices Of County, State or Federal Government (Office)	P	
Libraries	P	
Municipal Buildings/Uses	P	
Fire/Emergency Services	P	
Parks, Playgrounds & Recreation	P	
Utility Service Structures	P	
Agricultural/Conservation Uses		
Agricultural Uses	P	
Conservation Areas & Uses	P	

~~**Accessory Uses**: Car Wash; Family Day Care (Youth/Adult); Satellite Antenna; Essential Services; Home-based Business, No Impact; Parking Lot, Private Off-Street; Parking Structure, Private; Parking Space(s), Private Off-Street; Outdoor Cafes; Personal Services; Sidewalk Cafes; Solar Collectors and Solar-related Equipment; Swimming Pools; Wind Energy Conversion Systems; Vehicle Rental~~

Note: Uses Similar to Specified Permitted Uses and Unique Buildings available by Conditional Use Approval

Map 10: Zoning District Map - General Commercial

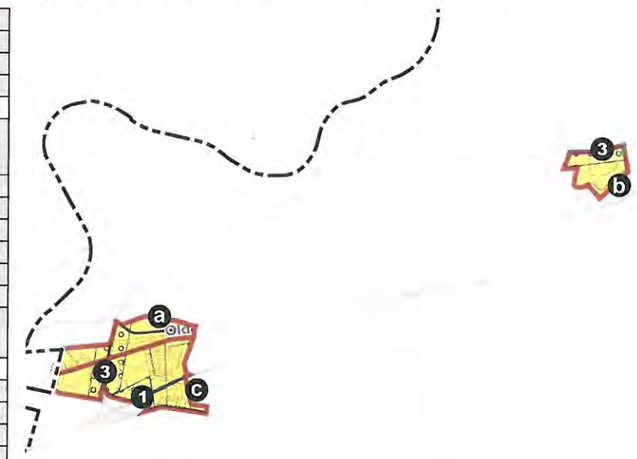

Overlays

- Environmental Overlays
- 1 Route 322/422
- 3 Hersheypark Drive/Route 39

Development Approval Area

- a Central Site Development Approval Area
- b North/South Master Plan Approval Area
- c West Master Plan Approval Area

Table 15: General Commercial Dimensions

A	Minimum Lot Width (FT)			100
B	Minimum Lot Depth (FT)			150
C	Minimum Lot Area			N/A
SETBACKS (FT)	PRINCIPAL STRUCTURE	D Front	MIN	25
			MAX	N/A
		E Side	MIN	15
		F Rear	MIN	35
	~~PARKING (Minimum)~~		~~FRONT~~	~~10~~
			~~SIDE~~	~~5~~
			~~REAR~~	~~10~~
MAX HEIGHT (FT)	G PRINCIPAL STRUCTURE			40
	H ACCESSORY STRUCTURE			20
Maximum Impervious Coverage				60%
MIN. VEGETATIVE COVER				30%

Figure 6: General Commercial Lot Dimensional Diagram

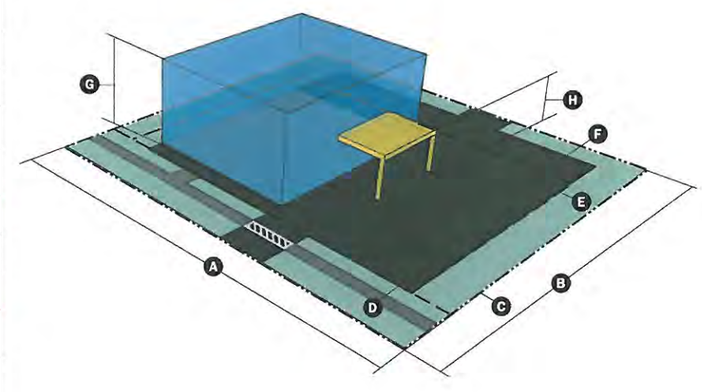

§225-307 RESERVED

***Table 12:* RESERVED**

***Map 9: Zoning District Map* - RESERVED**

from 5-4-16
public release

***Table 13:* RESERVED**

Figure 5:* RESERVED *Diagram

9-7-16 release

§ 225-308 Planned Campus North

Map 10: Zoning District - Planned Campus North

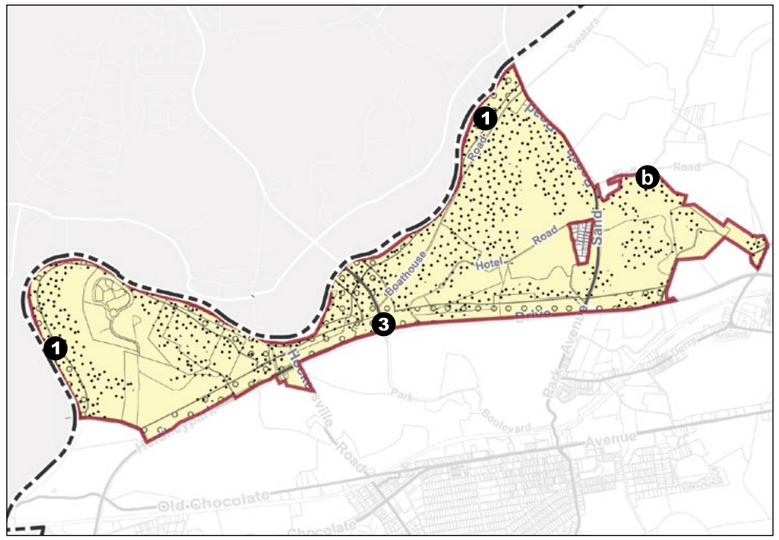

Overlays

- Environmental Overlays
- 1 Community Heritage Buffer
- 3 Hersheypark Drive/ Route 39

Approval Areas

- b North/SouthMaster Plan Approval Area

Table 15: Planned Campus North Dimensions

A	Minimum Lot Width (FT)			100
B	Minimum Lot Depth (FT)			150
C	Minimum Lot Area			30,000 SF
SETBACKS (FT)	PRINCIPAL STRUCTURE	D Front	Min	25
			Max	N/A
		E Side	Min	15
		F Rear	Min	35
MAX HEIGHT (FT)	G Principal Structure			60
	Accessory Structure			N/A
Maximum Impervious Coverage				60%
Minimum Vegetated Coverage				30%
Maximum Residential Density				3 DU/ NDA

Figure 5: Planned Campus North Lot Dimensional Diagram

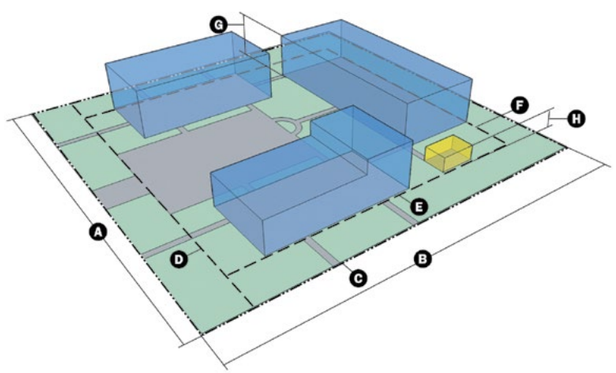

Table 14: Planned Campus North Uses

Residential Uses		
Multifamily Apartment Dwellings	C	§501.2
Farm Home Occupation	SE	§502.2
Private Community Facilities/Recreation Areas	P	
No-Impact Home Based Business	P	
Accessory Dwelling Units	SE	§502.9
Commercial Uses		
Business and Professional Offices	P	
Commercial Parking Lot or Structure	C	§501.8
Communications Antenna, Building-mounted	P	
Communications Antenna, Towers < 50 ft	P	
Communications Antenna, Towers > 50 ft	SE	§502.5
Communications Antenna, Co-located	P	
Food Services Without Drive-Through	P	
Guest Lodging, Dining and Conference Facilities	P	
Hotels and Motels	C	§501.50
Landscape and Garden Service - non-retail	C	§501.15
Mixed Use Building	C	§501.47
Private Parking Lot or Structure	C	§501.17
Recreational, Sports and Entertainment Facilities		
Botanical Gardens	P	
Archery & Shooting Ranges, Indoor	C	§501.22
Archery & Shooting Ranges, Outdoor	C	§501.23
Recreation Facilities for Employees, Faculty & Students	P	
Sport & Field Complexes	P	
Residence Hotels and Motels	C	§501.50
Visitor Center	C	§501.48
Institutional Uses		
Life Care Facilities	C	§501.34
Schools	P	
Municipal/Public Uses		
Administrative Offices of County, State or Federal Government (Office)	C	§501.46
Municipal Buildings and Uses	P	
Fire/Emergency Services	P	
Parks, Playgrounds & Recreation	P	
Utility Service Structures	P	
Utility Buildings	P	
Sewage Treatment Plants	P	
Agricultural/Conservation Uses		
Agricultural Uses	P	
Conservation Areas & Uses	P	
Miscellaneous		
Uses similar to specified permitted uses	C	§501.40
Unique Buildings	C	§501.44

from 5-4-16 public release

§225-309 Planned Campus North.

Table 16: Planned Campus North

Residential Uses		
Multifamily Apartment Dwellings	C	§501.2
Farm Home Occupation	SE	§502.2
Private Community Facilities/Recreation Areas	P	
Commercial Uses		
Business and Professional Offices	P	
Commercial Parking Lot or Structure	C	§501.8
Communications Antenna, Building-mounted	P	
Communications Antenna, Towers < 50 feet in	P	
Communications Antenna, Towers > 50 feet in	SE	§502.5
Communications Antenna, Co-located	P	
Food Services Without Drive-Thru	P	
Guest Lodging, Dining and Conference Fac.	P	
Hotels and Motels	P	
Landscape and Garden Service - non-retail	C	§501.15
Mixed Use Building	C	§501.47
Private Parking Lot or Structure	C	§501.18
Recreational, Sports & Entertainment Facilities (Private)		
Arboretums & Botanical Gardens	P	
Archery & Shooting Ranges, Indoor and Outdoor	C	
Recreation Facilities for Employees, Faculty & Students	P	
Sport & Field Complexes	P	
Visitor Center	C	§501.48
Institutional Uses		
Museums	P	
Life Care Facilities	C	§501.34
Place of Worship/Place of Assembly	P	
Schools	P	
Municipal/Public Uses		
Administrative Offices Of County, State or Federal Government (Office)	C	§501.46
Municipal Buildings/Uses	P	
Fire/Emergency Services	P	
Parks, Playgrounds & Recreation	P	
Utility Service Structures	P	
Utility Buildings	P	
Sewage Treatment Plants	P	
Agricultural/Conservation Uses		
Agricultural Uses	P	
Conservation Areas & Uses	P	

~~**Accessory Uses**: Accessory Dwelling; Carport; Satellite Antenna; Essential Services; Home-based Business, No Impact; Home Occupation; Parking Lot, Private Off-Street; Parking Lot, Public Off-Street; Parking Structure, Private; Parking Space(s), Private Off-Street; Outdoor Cafes; Outdoor Entertainment; Sidewalk Cafes; Solar Collectors and Solar-related Equipment; Swimming Pools; Wind Energy Conversion Systems; Vehicle Rental~~

Note: Uses Similar to Specified Permitted Uses and Unique Buildings available by Conditional Use Approval

Map 11: Zoning District Map - Planned Campus North

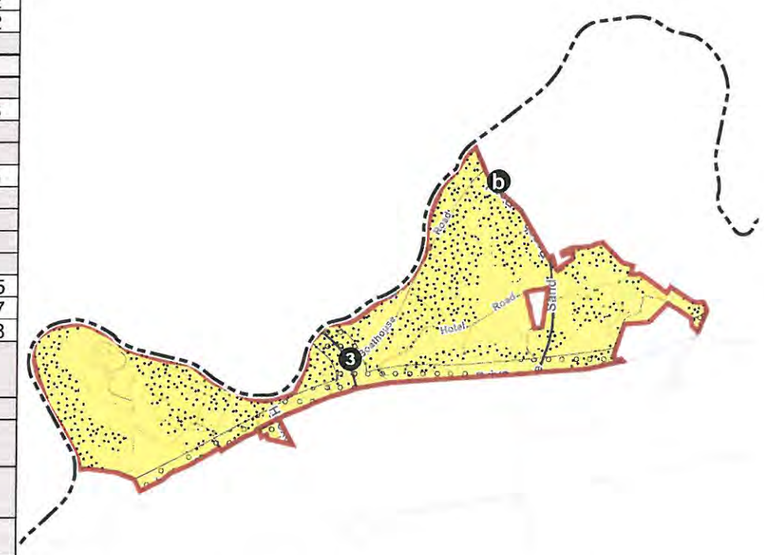

Overlays

Environmental Overlays

3 Hersheypark Drive/Route 39

Development Approval Area

b North/South Master Plan Approval Area

Table: 17: Planned Campus North Dimensions

A Minimum Lot Width (FT)				100
B Minimum Lot Depth (FT)				150
C Minimum Lot Area				30,000 SF
SETBACKS (FT)	PRINCIPAL STRUCTURE	D Front	MIN	25
			MAX	N/A
		E Side	MIN	15
		F Rear	MIN	35
	~~PARKING (Minimum)~~		~~FRONT~~	~~10~~
			~~SIDE~~	~~5~~
			~~REAR~~	~~5~~
MAX HEIGHT (FT)	G PRINCIPAL STRUCTURE			60
	H ACCESSORY STRUCTURE			N/A
Maximum Impervious Coverage				60%
MIN VEGETATIVE COVER				30%

Figure 7: Planned Campus North Lot Dimensional Diagram

MAX RES. DENSITY 3 DU/NDA

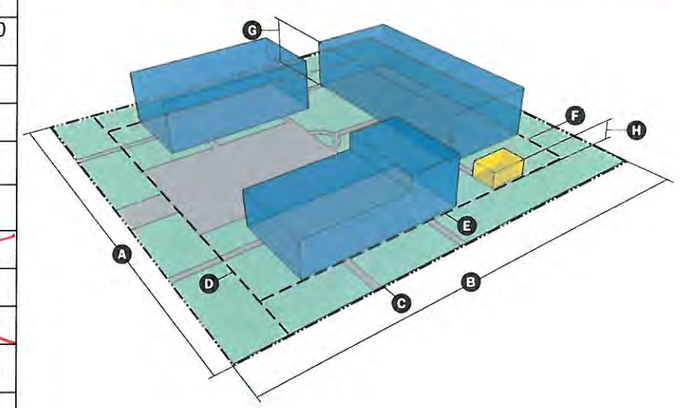

§ 225-309 Planned Campus South

Map 11: Zoning District - Planned Campus South

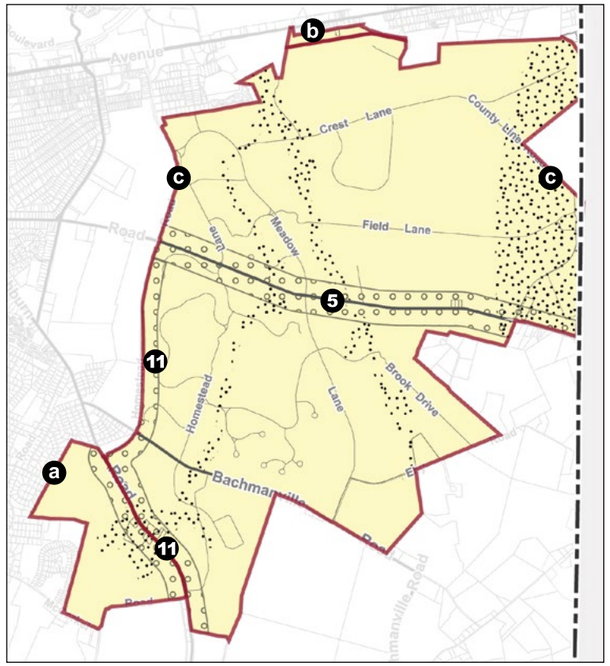

Overlays

- Environmental Overlays
- 5 Governor Road
- 11 Homestead/Fishburn Roads

Approval Areas

- a Central Master Plan Approval Area
- b North/SouthMaster Plan Approval Area
- c West Master Plan Approval Area

Figure 6: Planned Campus South Lot Dimensional Diagram

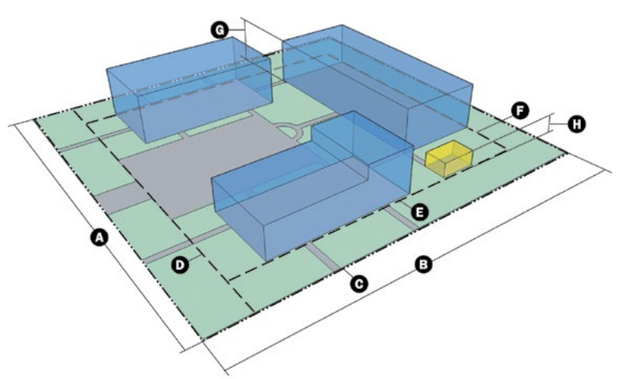

Table 17: Planned Campus South Dimensions

A	Minimum Lot Width (FT)			400
B	Minimum Lot Depth (FT)			200
C	Minimum Non-res. Lot Area			5 ac
SETBACKS (FT)	PRINCIPAL STRUCTURE	D Front	Min	50
			Max	N/A
		E Side	Min	50
		F Rear	Min	50
	ACCESSORY (minimum)		Front	50
			Side	20
			Rear	50
MAX HEIGHT (FT)	G Principal Structure			60
	H Accessory Structure			20
Maximum Impervious Coverage				15%
Minimum Vegetated Coverage				75%

§ 225-309 Planned Campus South

9-7-16 release

Table 16: Planned Campus South Uses

Residential Uses		
Dwellings for Employees & Students	P	
Farm Home Occupation	SE	§502.2
Family Child Care Home	SE	§502.3
Private Community Facilities/Recreation Areas	P	
No-Impact Home Based Business	P	
Accessory Dwelling Units	SE	§502.9
Commercial Uses		
Communications Antenna, Building-mounted	P	
Communications Antenna, Towers < 50 ft	P	
Communications Antenna, Towers > 50 ft	SE	§502.5
Communications Antenna, Co-located	P	
Mixed Use Building	P	
Recreational, Sports and Entertainment Facilities		
Botanical Gardens	P	
Recreation Facilities for Employees, Faculty & Students	P	
Institutional Uses		
Museums	P	
Place of Worship/Place of Assembly	P	
Schools	P	
Municipal/Public Uses		
Administrative Offices of County, State or Federal Government (Office)	C	§501.46
Libraries	P	
Municipal Buildings and Uses	P	
Fire/Emergency Services	P	
Parks, Playgrounds & Recreation	P	
Utility Service Structures	P	
Agricultural/Conservation Uses		
Agricultural Uses	P	
Conservation Areas & Uses	P	
Miscellaneous		
Uses similar to specified permitted uses	C	§501.40
Unique Buildings	C	§501.44

from 5-4-16 public release

§225-310 Planned Campus South.

Table 18: Planned Campus South Uses

Residential Uses		
Dwellings for Employees & Students	P	
Farm Home Occupation	SE	§502.2
Family Child Care Home	SE	§502.3
Private Community Facilities/Recreation Areas	P	
Commercial Uses		
Communications Antenna, Building-	P	
Communications Antenna, Towers < 50	P	
Communications Antenna, Towers > 50	SE	§502.5
Communications Antenna, Co-located	P	
Mixed Use Building	P	
Recreational, Sports & Entertainment Facilities (Private)		
Arboretums & Botanical Gardens	P	
Recreation Facilities for Employees, Faculty & Students	P	
Institutional Uses		
Museums	P	
Place of Worship/Place of Assembly	P	
Schools	P	
Municipal/Public Uses		
Administrative Offices Of County, State or Federal Government (Office)	C	§501.46
Libraries	P	
Municipal Buildings/Uses	P	
Fire/Emergency Services	P	
Parks, Playgrounds & Recreation	P	
Utility Service Structures	P	
Agricultural/Conservation Uses		
Agricultural Uses	P	
Conservation Areas & Uses	P	

~~**Accessory Uses**: Accessory Dwelling; Carport; Family Day Care (Youth/Adult); Satellite Antenna; Essential Services; Home-based Business, No Impact; Parking Lot, Private Off-Street; Parking Lot, Public Off-Street; Parking Structure, Private; Parking Space(s), Private Off-Street; Outdoor Cafes; Personal Services; Sidewalk Cafes; Solar Collectors and Solar-related Equipment; Swimming Pools; Wind Energy Conversion Systems; Vehicle Rental~~

Note: Uses Similar to Specified Permitted Uses and Unique Buildings available by Conditional Use Approval

Map 12: Zoning District Map - Planned Campus South

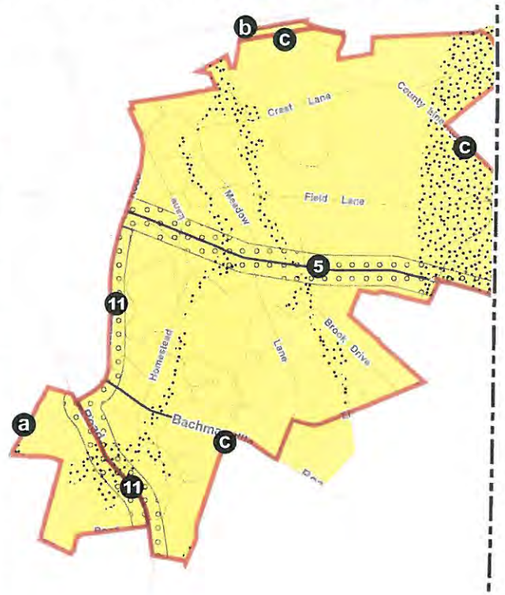

Overlays

- Environmental Overlays
- Governor Road
- Homestead/Fishburn Roads

Development Approval Area

- a — Central Site Development Approval Area
- b — North/South Master Plan Approval Area
- c — West Master Plan Approval Area

Table 19: Planned Campus South Dimensions

A	Minimum Lot Width (FT)			400
B	Minimum Lot Depth (FT)			200
C	Minimum Lot Area NON RES.			5 ac
SETBACKS (FT)	PRINCIPAL STRUCTURE	D Front	MIN	50
			MAX	N/A
		E Side	MIN	50
		F Rear	MIN	50
	ACCESSORY ~~PARKING~~ (Minimum)		FRONT	50
			SIDE	20
			REAR	50
MAX HEIGHT (FT)	G PRINCIPAL STRUCTURE			60
	H ACCESSORY STRUCTURE			20
Maximum Impervious Coverage				15%
MIN VEGETATIVE COVER				75%

Figure 8: Planned Campus South Lot Dimensional Diagram

MAX RES. DENSITY N/A

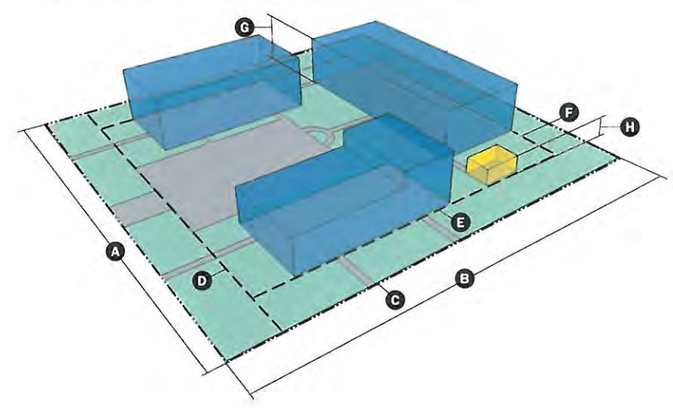

§ 225-310 Planned Campus West

Map 12: Zoning District - Planned Campus West

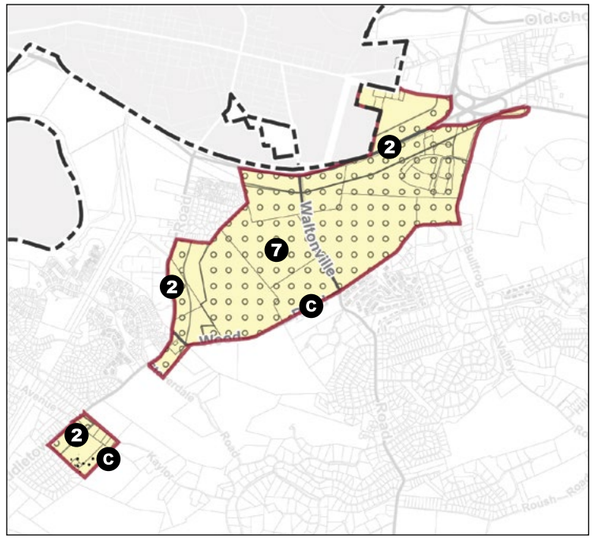

Overlays

- Environmental Overlays
- 2 Middletown Road
- 7 Planned Campus West Future Development Area

Approval Areas

- C West Master Plan Approval Area

Figure 7: Planned Campus West Lot Dimensional Diagram

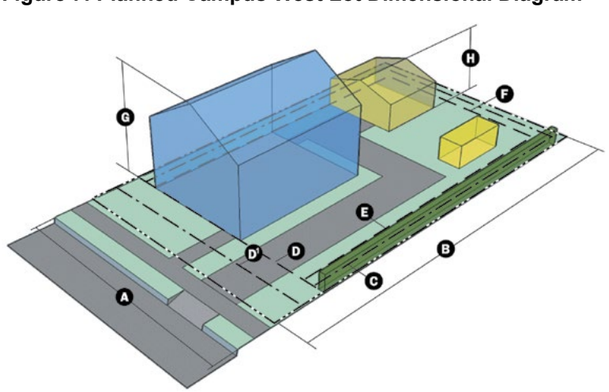

Table 19: Planned Campus West Dimensions

A	Minimum Lot Width (FT)			100
B	Minimum Lot Depth (FT)			150
C	Minimum Non-res. Lot Area			N/A
SETBACKS (FT)	PRINCIPAL STRUCTURE	D Front	Min	25
			Max	N/A
		E Side	Min	15
		F Rear	Min	35
	ACCESSORY (minimum)		Front	50
			Side	5
			Rear	10
MAX HEIGHT (FT)	G Principal Structure			60
	H Accessory Structure			20
Maximum Impervious Coverage				60%
Minimum Vegetated Coverage				30%
RESIDENTIAL DENSITY	SFAD			3 DU/ NDA
	Apartments			10 DU/ NDA
	Townhouse			7 DU/ NDA

9-7-16 release

Table 18: Planned Campus West Uses

Residential Uses		
Single-family Detached Dwelling	C	§501.4
Single-family Semidetached Dwelling	C	§501.4
Single-family Attached Dwelling (Townhouse)	O7	
Two-family Detached Dwelling	O7	
Multifamily Apartment Dwellings	C	§501.2
Farm Home Occupation	SE	§502.2
Family Child Care Home	SE	§502.3
Private Community Facilities/Recreation Areas	P	
Home Occupations	P	
No-Impact Home Based Business	P	
Accessory Dwelling Units	SE	§502.7
Commercial Uses		
Automotive Car Wash/Lubrication Facilities	C	§501.6
Bakery Retail	P	
Business Professional Office	P	
Communications Antenna, Building-mounted/Utility	P	
Communications Antenna, Towers < 50 ft	P	
Communications Antenna, Towers > 50 ft	P	
Communications Antenna, Co-located	P	
Crematory		
Financial Institutions	P	
Food Catering	C	§501.11
Food Services Without Drive-Through	P	
Food Services Drive-Through	C	§501.9
Fuel Service - Minor	C	§501.18
Funeral Home	P	
Healthcare Practitioners Office	P	
Hotels and Motels	C	§501.50
Landscaping and Garden Center - retail	C	§501.15
Laundromat	P	
Membership Club	C	§501.16
Micro-distilleries/Breweries	P	
Mixed Use Building	P	
Outpatient Medical Treatment Facilities	O7	
Personal Service Establishments	P	
Pet Grooming Facilities	P	
Photocopy Service	P	
Private Parking Lot or Structure	P	
Recreational, Sports and Entertainment Facilities		
Bowling Alleys	C	§501.24
Exercise & Fitness Centers	P	
Research/Technology Business Incubator	C	§501.36
Residence Hotels and Motels	C	§501.50
Retail, Large-Scale	C	§501.29
Retail, Small-Scale	P	

Commercial Uses		
Studios/Gallery for Teaching, Dancing, Art, Music or Similar Cultural Pursuits	P	
Theater and Auditorium	C	§501.57
Veterinary Office	P	
Winery	P	
Life Care Facilities	C	§501.34
Group Child Care Facilities	C	§501.52
Medical-related Research Facilities	O7	
Museums	P	
Other Scientific Research, Development and Training Facilities	O7	
Place of Worship/Place of Assembly	P	
Schools	P	
Skilled Nursing	C	§501.34
Municipal/Public Uses		
Administrative Offices of County, State or Federal Government (Office)	P	
Libraries	P	
Municipal Buildings and Uses	P	
Fire/Emergency Services	P	
Parks, Playgrounds & Recreation	P	
Utility Service Structures	P	
Agricultural/Conservation Uses		
Agricultural Uses	P	
Conservation Areas & Uses	P	
Miscellaneous		
Uses similar to specified permitted uses	C	§501.40
Unique Buildings	C	§501.44

from 5-4-16 public release

§225-316 Planned Campus West.

Table 29: Planned Campus West

Residential Uses		
Single-family Attached Dwelling (Townhouse)	C	
Multifamily Apartment Dwellings	C	
Single-Family Attached Dwelling (Townhouse)	O7	
Multifamily Apartment Dwelling	O7	
Farm Home Occupation	SE	§502.2
Family Child Care Home	SE	§502.3
Private Community Facilities/Recreation Areas	P	
Commercial Uses		
Automotive Car Wash/Lubrication Facilities	C	§501.6
Business & Professional Offices	P	
Communications Antenna, Building-mounted	P	
Communications Antenna, Towers < 50 feet in	P	
Communications Antenna, Co-located	P	
Dry Cleaning Service, Retail	P	
Financial Institutions	P	
Food Catering	C	§501.13
Food Services Without Drive-Thru	C	
Food Services With Drive-Thru	P	
Fuel Service – Minor and Major	C	§501.19
Funeral Homes	C	§501.
Healthcare Practitioners Office	P	
Hotels & Motels	C	
Landscaping & Garden Center - retail	C	§501.15
Laundromat	O	
Membership Club	C	§501.16
Micro-distilleries/Breweries	P	
Mixed Use Building	P	
Outpatient Medical Treatment Facilities	O7	
Personal Service Establishments	P	
Pet Grooming Facilities	P	
Private Parking Lot or Structure	P	
Recreational, Sports & Entertainment Facilities (Private)		
Bowling Alleys	C	§501.24
Exercise & Fitness Centers	P	
Retail, Large-Scale	C	§501.29
Retail, Small-Scale	P	
Research/Technology Business Incubator	C	
Residence Hotels and Motels	C	
Studios/Gallery for Teaching, Dancing, Art, Music or Similar Cultural Pursuits	P	
Theater & Auditorium	P	
Veterinary Office	P	
Institutional Uses		
Life Care Facilities	C	§501.35
Group Child Care Facilities	C	§501.
Medical-related Research Facilities	O7	
Museums	P	
Other Scientific Research, Development and Training Facilities	O7	
Skilled Nursing	C	§501.35
Place of Worship/Place of Assembly	P	
Schools	P	
Municipal/Public Uses		
Administrative Offices Of County, State or Federal Government (Office)	P	
Libraries	P	
Municipal Buildings/Uses	P	
Fire/Emergency Services	P	
Parks, Playgrounds & Recreation	P	
Utility Service Structures	P	
Utility Buildings	P	
Agricultural/Conservation Uses		
Agricultural Uses	P	
Conservation Areas & Uses	P	

~~**Accessory Uses**: Accessory Dwelling; Carport; Family Day Care (Youth/Adult); Satellite Antenna; Essential Services; Home-based Business, No Impact; Home Occupation; Parking Lot; Private Off-Street; Parking Structure, Private; Parking Space(s), Private Off-Street; Outdoor Cafes; Personal Services; Sidewalk Cafes; Solar Collectors and Solar-related Equipment; Swimming Pools; Wind Energy Conversion Systems.~~

Note: Uses Similar to Specified Permitted Uses and Unique Buildings available by Conditional Use Approval

Map 18: Zoning District Map – Planned Campus West

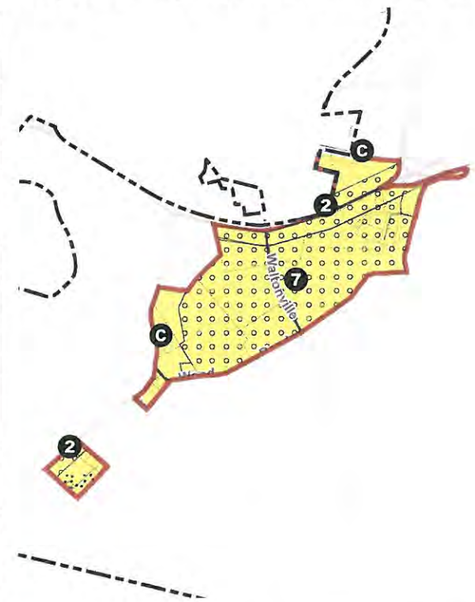

Overlays

- Environmental Overlays
- 2 Middletown Road
- 7 Bullfrog Valley/Middletown Roads Future Development Area

Development Approval Area

- C West Master Plan Approval Area

Table 30: Planned Campus West Dimensions

A	Minimum Lot Width (FT)		100
B	Minimum Lot Depth (FT)		150
C	Minimum Lot Area		N/A
SETBACKS (FT)	PRINCIPAL STRUCTURE D Front	MIN	25
		MAX	N/A
	PRINCIPAL STRUCTURE E Side	MIN	15
	PRINCIPAL STRUCTURE F Rear	MIN	35
	~~ACCESSORY~~ ~~PARKING~~ (Minimum)	FRONT	~~25~~ 50
		SIDE	5
		REAR	10
MAX HEIGHT (FT)	G PRINCIPAL STRUCTURE		~~40~~ 60'
	H ACCESSORY STRUCTURE		20
Maximum Impervious Coverage			60%
MIN VEGETATIVE COVER			30%

Figure 14: Planned Campus West Lot Dimensional Diagram

RESIDENTIAL DENSITY
SFD 3 DU/NDA
APARTMENTS 10 DU/NDA
TOWNS 7 DU/NDA
} PROVIDE BONUS DENSITY IN MASTER PLAN PROCESS

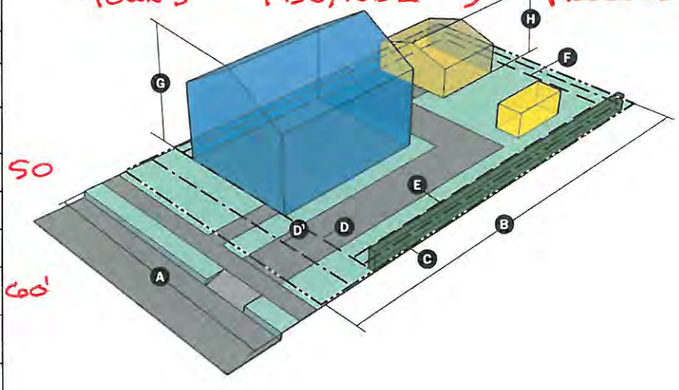

§ 225-311 Medical Campus Central

Map 13: Zoning District - Medical Campus Central

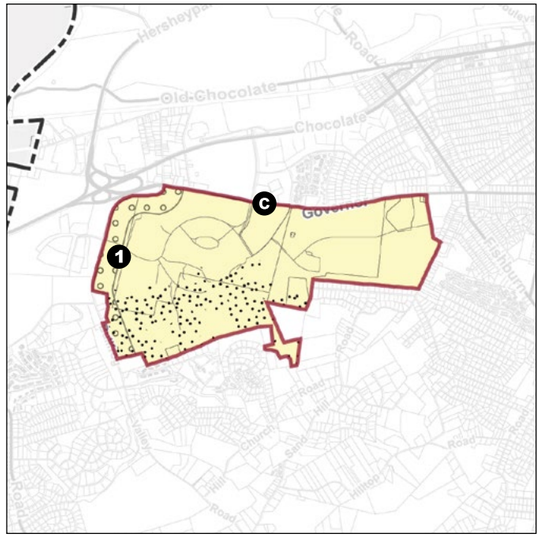

Overlays

- Environmental Overlays
- 1 Community Heritage Buffer

Approval Areas

- C West Master Plan Approval Area

Table 21: Medical Campus Central Dimensions

A	Minimum Lot Width (FT)		100
B	Minimum Lot Depth (FT)		150
C	Minimum Non-res. Lot Area		N/A
SETBACKS (FT)	PRINCIPAL STRUCTURE	Roadways	100
		Zoning Boundary	200
	INTERIOR LOTS (minimum)	Front	25
		Side	15
		Rear	35
MAX HEIGHT (FT)	G Principal Structure		95[1]
	Accessory Structure		N/A
Maximum Impervious Coverage			60%
Minimum Vegetated Coverage			30%
Maximum Residential Density			10 DU/ NDA

Figure 8: Medical Campus Central Lot Dimensional Diagram

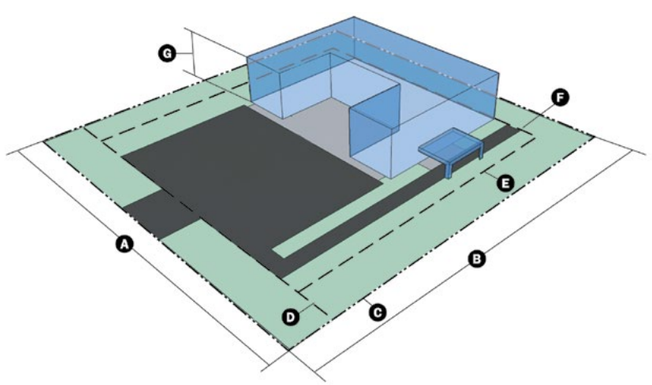

§ 225-311 Medical Campus Central

9-7-16 release

Table 20: Medical Campus Central Uses

Residential Uses		
Dwellings for Employees & Students	P	
Farm Home Occupation	SE	§502.2
Private Community Facilities/Recreation Areas	P	
No-Impact Home Based Business	P	
Accessory Dwelling Units	SE	§502.9
Commercial Uses		
Business and Professional Offices	P	
Commercial Parking Lot or Structure	C	§501.8
Communications Antenna, Building-mounted	P	
Communications Antenna, Towers < 50 ft	P	
Communications Antenna, Towers > 50 ft	SE	§502.5
Communications Antenna, Co-located	P	
Guest Lodging, Dining and Conference Facilities	C	§501.12
Healthcare Practitioners Office	P	
Heliport	C	§501.14
Mixed Use Building	P	
Outpatient Medical Treatment Facilities	P	
Private Parking Lot or Structure	C	§501.17
Recreational, Sports and Entertainment Facilities		
Recreation Facilities for Employees, Faculty & Students	P	
Research/Technology Business Incubator	C	§501.36
Veterinary Office	P	
Veterinary Hospital	P	
Institutional Uses		
Life Care Facilities	P	
Group Child Care Facilities	P	
Group Home for Persons with Disabilities	C	§501.35
Group Home for Persons without Disabilities	C	§501.35
Hospital	P	
Incinerators and Crematoriums	C	§501.54
Medical-related Research Facilities	P	
Other Scientific Research, Development and Training Facilities	P	
Place of Worship/Place of Assembly	P	
Schools	P	
Skilled Nursing	P	

Municipal/Public Uses		
Administrative Offices of County, State or Federal Government (Office)	P	
Libraries	P	
Municipal Buildings and Uses	P	
Fire/Emergency Services	P	
Parks, Playgrounds & Recreation	P	
Utility Service Structures	P	
Agricultural/Conservation Uses		
Agricultural Uses	P	
Conservation Areas & Uses	P	
Miscellaneous		
Uses similar to specified permitted uses	C	§501.40
Unique Buildings	C	§501.44

from 5-4-16 public release

§225-311 Medical Campus Central

Table 20: Medical Campus Central Uses

Residential Uses		
Dwellings for Employees & Students	P	
Farm Home Occupation	SE	§502.2
Private Community Facilities/Recreation	P	
Commercial Uses		
Business & Professional Offices	P	
Commercial Parking Lot or Structure	C	§501.8
Communications Antenna, Building-	P	
Communications Antenna, Towers < 50'	P	
Communications Antenna, Towers > 50'	SE	§502.5
Communications Antenna, Co-located	P	
Guest Lodging, Dining & Conference	C	§501.12
Healthcare Practitioners Office	P	
Heliport	C	§501.14
Mixed Use Building	P	
Outpatient Medical Treatment Facilities	P	
Private Parking Lot or Structure	C	§501.18
Research/Technology Business Incubator	C	§501.36
Recreational, Sports & Entertainment Facilities (Private)		
Recreation Facilities for Employees, Faculty & Students	P	
Veterinary Office	P	
Veterinary Hospital	P	

Institutional Uses		
Life Care Facilities	P	
Group Child Care Facilities	P	
Group Home for Persons with Disabilities	C	§501.36
Group Home for Persons without Disabilities	C	§501.36
Hospital	P	
Incinerators & Crematoriums for On-Site Generated Medical Wastes	C	§501._
Medical-related Research Facilities	P	
Other Scientific Research, Development & Training Facilities	P	
Skilled Nursing Home	P	
Place of Worship/Place of Assembly	P	
Schools	P	
Skilled Nursing	P	
Municipal/Public Uses		
Administrative Offices Of County, State or Federal Government (Office)	P	
Libraries	P	
Municipal Buildings/Uses	P	
Fire/Emergency Services	P	
Parks, Playgrounds & Recreation	P	
Utility Service Structures	P	
Agricultural/Conservation Uses		
Agricultural Uses	P	
Conservation Areas & Uses	P	

Map 13: Zoning District Map - Medical Campus Central

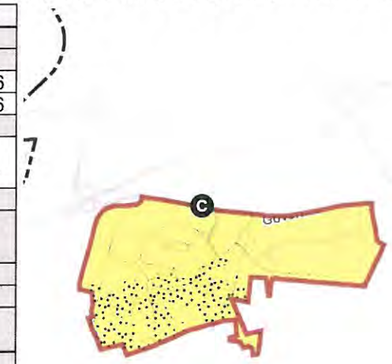

Overlays

Environmental Overlays

Development Approval Area

C West Master Plan Approval Area

~~**Accessory Uses**: Accessory Dwelling; Family Day Care (Youth/Adult); Satellite Antenna; Essential Services; Home-based Business, No Impact; Home Occupation; Parking Structure, Private; Parking Space(s), Private Off-Street; Outdoor Cafes; Sidewalk Cafes; Solar Collectors and Solar-related Equipment; Swimming Pools; Wind Energy Conversion Systems.~~

Note: Uses Similar to Specified Permitted Uses and Unique Buildings available by Conditional Use Approval

SETBACKS

PRINCIPAL STRUCTURES FROM:
ROADWAYS – 100'
ZONING BNDRY – 200'

INTERIOR LOTS:
FRONT – 25'
SIDE – 15'
REAR – 35'

Table 21: Medical Campus Dimensions

A Minimum Lot Width (FT)			100
B Minimum Lot Depth (FT)			150
C Minimum Lot Area			~~1 ac~~ N/A
SETBACKS (FT)	PRINCIPAL STRUCTURE	D Front	MIN 50
			MAX N/A
		E Side	MIN 50
		F Rear	MIN 50
	PARKING (Minimum)		FRONT 10
			SIDE 5
			REAR 10
MAX HEIGHT (FT)	G PRINCIPAL STRUCTURE		95 [1]
	ACCESSORY STRUCTURE		N/A
Maximum Impervious Coverage			60%
MIN. VEGETATIVE COVER			30%

Figure 9: Medical Campus Lot Dimensional Diagram

MAX. RES. DENSITY 10 DU/NDA

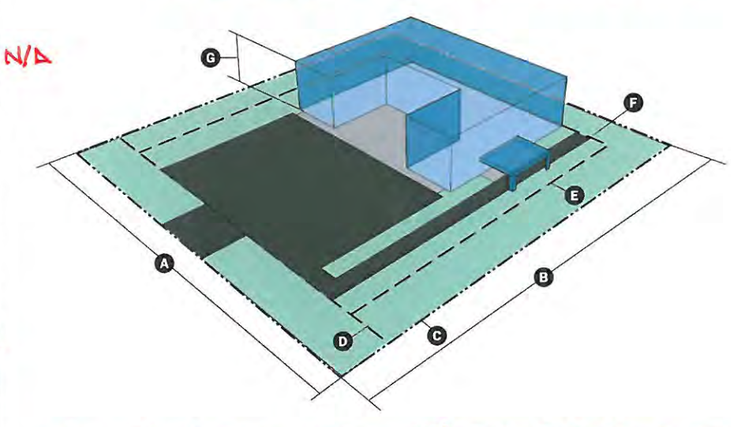

1 - 130' PERMITTED W/ COMPLIANCE TO SECTION 225-417

9-7-16 release

§ 225-312 Commercial Recreation

Map 14: Zoning District - Commercial Recreation

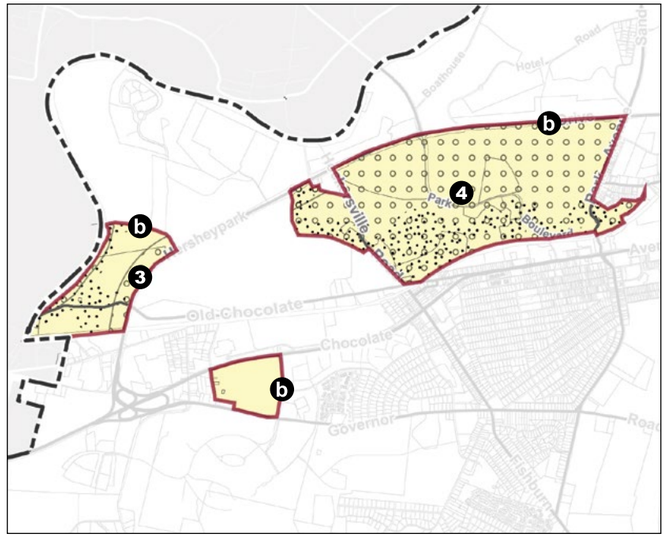

Overlays

- Environmental Overlays
- 3 Hersheypark Drive/ Route 39
- 4 Hersheypark

Approval Areas

- b North/SouthMaster Plan Approval Area

Table 23: Commercial Recreation Dimensions

A	Minimum Lot Width (FT)			200
B	Minimum Lot Depth (FT)			200
C	Minimum Non-res. Lot Area			2 ac
SETBACKS (FT)	PRINCIPAL STRUCTURE	D Front	Min	50
			Max	N/A
		E Side	Min	50
		F Rear	Min	50
	ACCESSORY (minimum)		Front	25
			Side	20
			Rear	25
MAX HEIGHT (FT)	G Principal Structure			95[1,2]
	Accessory Structure			N/A
Maximum Impervious Coverage				60%[3]
Minimum Vegetated Coverage				30%[3]

Figure 9: Commercial Recreation Lot Dimensional Diagram

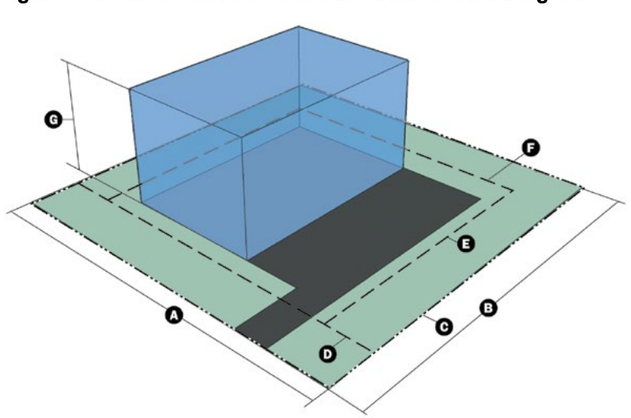

Table 22: Commercial Recreation Uses

Residential Uses		
Dwellings for Employees & Students	P	
Farm Home Occupation	SE	§502.2
Private Community Facilities/Recreation Areas	P	
No-Impact Home Based Business	P	
Accessory Dwelling Units	SE	§502.9
Commercial Uses		
Campgrounds	SE	§502.4
Commercial Entertainment Signs	O4	
Commercial Parking Lot or Structure	P	
Communications Antenna, Building-mounted	P	
Communications Antenna, Towers < 50 ft	P	
Communications Antenna, Towers > 50 ft	SE	§502.8
Communications Antenna, Co-located	P	
Food Services Without Drive-Through	P	
Guest Lodging, Dining and Conference Facilities	P	
Hotels and Motels	P	
Membership Club	SE	§502.8
Mixed Use Building	P	
Private Parking Lot or Structure	P	
Recreational, Sports and Entertainment Facilities		
Amusement, Theme, Entertainment or Water Parks	O4	
Amusement Arcades	P	
Botanical Gardens	P	
Bowling Alleys	P	
Casinos & Gambling Facilities	C	§501.25
Country Club	P	
Exercise & Fitness Centers	P	
Golf Courses (Conventional & Special)	P	
Recreation Facilities for Employees, Faculty & Students	P	
Sporting and Entertainment Arenas & Stadiums	P	
Sport & Field Complexes	P	
Zoos	P	
Residence Hotels and Motels	P	
Retail, Small-Scale	C	§501.51
Sexually Oriented Businesses	C	§501.39
Theater and Auditorium	P	
Visitor Center	P	
Winery	C	§ 501.10
Institutional Uses		
Museums	P	
Place of Worship/Place of Assembly	P	
Schools	P	

Municipal/Public Uses		
Administrative Offices of County, State or Federal Government (Office)	P	
Libraries	P	
Municipal Buildings and Uses	P	
Fire/Emergency Services	P	
Parks, Playgrounds & Recreation	P	
Utility Service Structures	P	
Agricultural/Conservation Uses		
Agricultural Uses	P	
Conservation Areas & Uses	P	
Miscellaneous		
Uses similar to specified permitted uses	C	§501.14
Unique Buildings	C	§501.44

from 5-4-16 public release

§225-312 Commercial Recreation.

Table 22: Commercial Recreation Uses

Residential Uses		
Boarding Home	P	
Farm Home Occupation	SE	§502.2
Private Community Facilities/Recreation	P	
Tourist Home	P	
Commercial Uses		
Campgrounds	P	
Amusement Arcades	P	
Commercial Entertainment Signs	O4	
Commercial Parking Lot or Structure	P	
Communications Antenna, Building-mounted	P	
Communications Antenna, Towers < 50 feet	P	
Communications Antenna, Towers > 50 feet	SE	§502.5
Communications Antenna, Co-located	P	
Food Services Without Drive-Thru	P	
Guest Lodging, Dining & Conference	P	
Hotels & Motels	P	
Membership Club	SE	§502.8
Mixed Use Building	P	
Private Parking Lot or Structure	P	
Residence Hotels & Motels	P	
Recreational, Sports & Entertainment Facilities (Private)		
Amusement, Theme, Entertainment or Water Parks	O4	
Amusement Arcades	P	
Arboretums & Botanical Gardens	P	
Bowling Alleys	P	
Casinos & Gambling Facilities	C	§501.25
Country Club	P	
Cultural, Entertainment & Tourist Related	P	
Exercise & Fitness Centers	P	
Golf Courses (Conventional & Special)	P	
Recreation Facilities for Employees, Faculty & Students	P	
Sporting and Entertainment Arenas &	P	
Sport & Field Complexes	P	
Zoos	P	
Retail, Small-Scale	C	§501.
Residence Hotels and Motels	P	
Theater & Auditorium	P	
Sexually Oriented Businesses	C	
Visitor Center	P	
Winery	C	§501.10
Institutional Uses		
Museums	P	
Place of Worship/Place of Assembly	P	
Schools	P	
Municipal/Public Uses		
Administrative Offices Of County, State or Federal Government (Office)	P	
Municipal Buildings/Uses	P	
Fire/Emergency Services	P	
Parks, Playgrounds & Recreation	P	
Utility Service Structures	P	
Agricultural/Conservation Uses		
Agricultural Uses	P	
Conservation Areas & Uses	P	

Map 14: Zoning District Map - Commercial Recreation

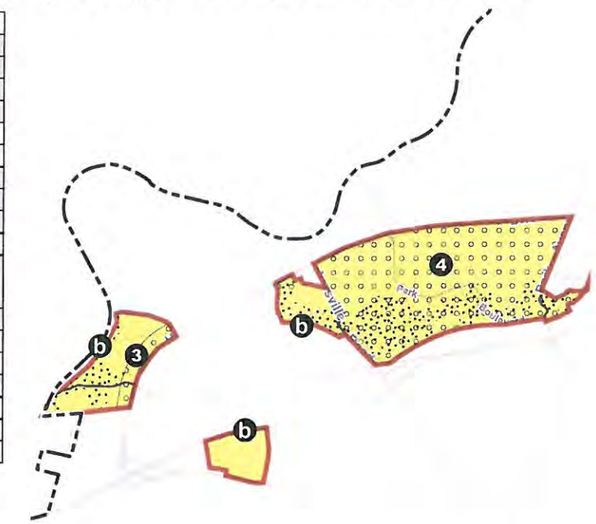

Overlays

Environmental Overlays

Hersheypark Drive/Route 39

Hersheypark

Development Approval Areas

North/South Master Plan Approval Area

Table 23: Commercial Recreation Dimensions

A Minimum Lot Width (FT)			200
B Minimum Lot Depth (FT)			200
C Minimum Lot Area			2 ac
SETBACKS (FT)	PRINCIPAL STRUCTURE D Front	MIN	50
		MAX	N/A
	PRINCIPAL STRUCTURE E Rear	MIN	50
	PRINCIPAL STRUCTURE F Side	MIN	50
	ACCESSORY ~~PARKING~~ (Minimum)	FRONT	25
		SIDE	20
		REAR	25
MAX HEIGHT (FT)	G PRINCIPAL STRUCTURE		95 [1,2]
	ACCESSORY STRUCTURE		N/A
Maximum Impervious Coverage			60% [3]
MIN VEGETATIVE COVER			30% [3]

Figure 10: Commercial Recreation Lot Dimensional Diagram

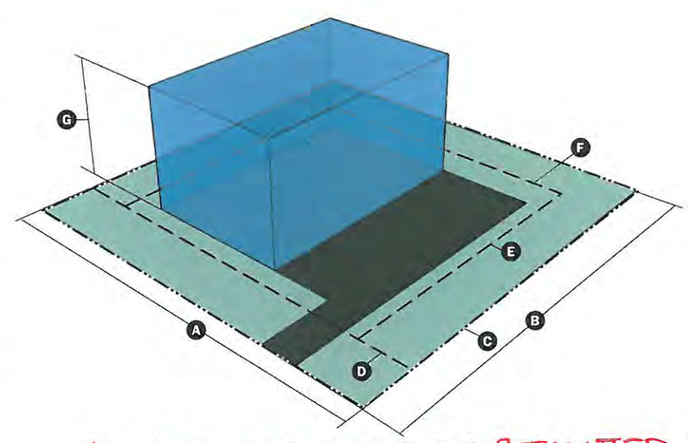

1 - SEE 225-502.9 FOR PERMITTED HEIGHT EXCEPTIONS IN OVERLAY 4.
2 - SEE 225-417 FOR PERMITTED HEIGHT EXCEPTIONS.
3 - MAX. IMPERVIOUS COVER OF 85%, MIN VEGETATIVE COVER OF 5% PERMITTED IN OVERLAY 4.

~~Accessory Uses~~: ~~Family Day Care (Youth/Adult); Satellite Antenna; Essential Services; Parking Lot, Private Off-Street; Parking Lot, Public Off-Street; Parking Structure, Private; Parking Space(s), Private Off-Street; Outdoor Cafes; Outdoor Entertainment; Personal Services; Sidewalk Cafes; Solar Collectors and Solar-related Equipment; Swimming Pools; Wind Energy Conversion Systems; Vehicle Rental~~

Note: Uses Similar to Specified Permitted Uses and Unique Buildings available by Conditional Use Approval

§ 225-313 Commercial Golf

Map 15: Zoning District - Commercial Golf

Overlays

Environmental Overlays

Approval Areas

a Central Master Plan Approval Area

Table 25: Commercial Golf Dimensions

A	Minimum Lot Width (FT)			400
B	Minimum Lot Depth (FT)			400
C	Minimum Non-res. Lot Area			5 ac
SETBACKS (FT)	PRINCIPAL STRUCTURE	D Front	Min	40
			Max	N/A
		E Side	Min	40
		F Rear	Min	40
MAX HEIGHT (FT)	G Principal Structure			40
	H Accessory Structure			N/A
Maximum Impervious Coverage				20%
Minimum Vegetated Coverage				70%

Figure 10: Commercial Golf Lot Dimensional Diagram

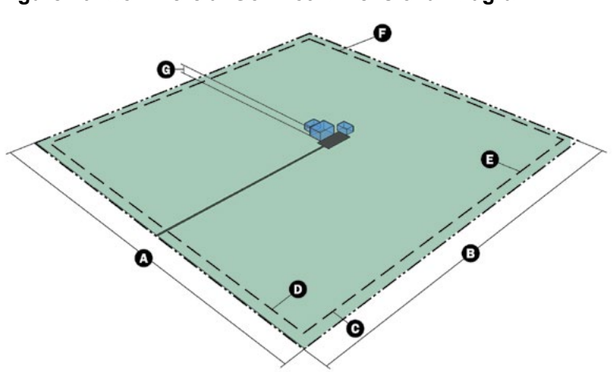

§ 225-313 Commercial Golf

9-7-16 release

Table 24: Commercial Golf Uses

Residential Uses		
Farm Home Occupation	SE	§502.2
Private Community Facilities/Recreation Areas	P	
Home Occupations		
No-Impact Home Based Business	P	
Accessory Dwelling Units	SE	§502.9
Commercial Uses		
Communications Antenna, Building-mounted	P	
Communications Antenna, Towers < 50 ft	P	
Communications Antenna, Towers > 50 ft	SE	§502.5
Communications Antenna, Co-located	P	
Food Services Without Drive-Through	P	
Membership Club	P	
Recreational, Sports and Entertainment Facilities		
Country Club	P	
Golf Courses (Conventional & Special)	P	
Municipal/Public Uses		
Administrative Offices of County, State or Federal Government (Office)	P	
Libraries		
Municipal Buildings and Uses	P	
Fire/Emergency Services	P	
Parks, Playgrounds & Recreation	P	
Utility Service Structures	P	
Agricultural/Conservation Uses		
Agricultural Uses	P	
Cemeteries		
Conservation Areas & Uses	P	
Miscellaneous		
Uses similar to specified permitted uses	C	§501.40
Unique Buildings	C	§501.44

from 5-4-16 public release

§225-313 Commercial Golf.

Table 23: Commercial Golf Uses

Residential Uses		
Farm Home Occupation	SE	§502.2
Private Community Facilities/Recreation	P	
Commercial Uses		
Communications Antenna, Building-mounted	P	
Communications Antenna, Towers < 50 feet	P	
Communications Antenna, Towers > 50 feet	SE	§502.5
Communications Antenna, Co-located	P	
Food Services Without Drive-Thru	P	
Membership Club	P	
Recreational, Sports & Entertainment Facilities (Private)		
Country Club	P	
Golf Courses (Conventional & Special)	P	
Municipal/Public Uses		
Administrative Offices Of County, State or Federal Government (Office)	P	
Municipal Buildings/Uses	P	
Fire/Emergency Services	P	
Parks, Playgrounds & Recreation	P	
Utility Service Structures	P	
Agricultural/Conservation Uses		
Agricultural Uses	P	
Conservation Areas & Uses	P	

Map 15: Zoning District Map - Commercial Golf

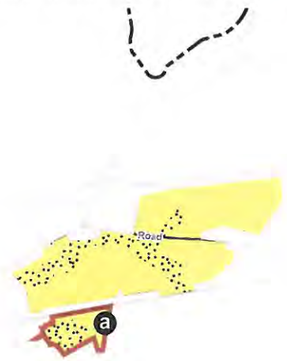

Overlays

Environmental Overlays

Development Approval Areas

a Central Site Development Approval Area

~~**Accessory Uses**: Family Day Care (Youth/Adult); Satellite Antenna; Essential Services; Parking Structure, Private; Parking Space(s), Private Off-Street; Outdoor Cafes; Sidewalk Cafes; Solar Collectors and Solar-related Equipment; Swimming Pools; Wind Energy Conversion Systems~~

Note: Uses Similar to Specified Permitted Uses and Unique Buildings available by Conditional Use Approval

Table 24: Commercial Golf Dimensions

A Minimum Lot Width (FT)			400
B Minimum Lot Depth (FT)			400
C Minimum Lot Area			5 ac
SETBACKS (FT)	PRINCIPAL STRUCTURE	D Front	MIN 40
			MAX N/A
		E Rear	MIN 40
		F Side	MIN 40
	~~PARKING (Minimum)~~		~~FRONT 25~~
			~~SIDE 20~~
			~~REAR 25~~
MAX HEIGHT (FT)	G PRINCIPAL STRUCTURE		40
	H ACCESSORY STRUCTURE		N/A
Maximum Impervious Coverage			20%
MIN VEGETATIVE COVER			70%

Figure11: Commercial Golf Lot Dimensional Diagram

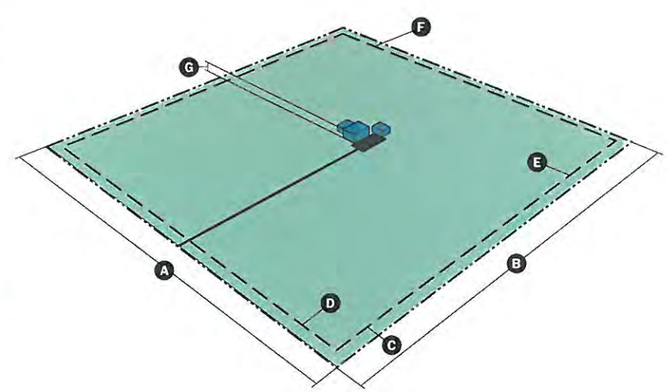

§ 225-314 Palmdale Mixed Use

9-7-16 release

Map 16: Zoning District - Palmdale Mixed Use

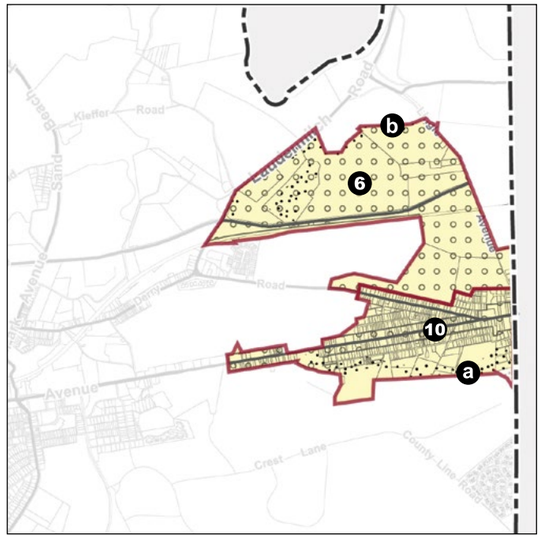

Overlays

- Environmental Overlays
- 6 Palmdale Future Development Area
- 10 East Chocolate Avenue

Approval Areas

- a Central Master Plan Approval Area
- b North/SouthMaster Plan Approval Area

Table 26: Palmdale Mixed Use Uses

Residential Uses		
Single-family Detached Dwelling	P	
Single-family Semidetached Dwelling	P	
Single-family Attached Dwelling (Townhouse)	O6	
Single Family Conversion	C	§501.1
Two-family Detached Dwelling	O6	
Multifamily Apartment Dwellings	O6,O10	
Bed and Breakfast Home	SE	§502.1
Farm Home Occupation	SE	§502.2
Family Child Care Home	SE	§502.3
Private Community Facilities/Recreation Areas	P	
Home Occupations	P	
No-Impact Home Based Business	P	
Accessory Dwelling Units	SE	§502.9
Commercial Uses		
Automotive Car Wash/Lubrication Facilities	C	§501.6
Bakery, Retail	P	
Business and Professional Offices	P	
Commercial Parking Lot or Structure	P	
Communications Antenna, Building-mounted	P	
Communications Antenna, Towers < 50 ft	P	
Communications Antenna, Towers > 50 ft	SE	§502.5
Communications Antenna, Co-located	P	
Dry Cleaning Service, Retail	P	
Financial Institutions	O10	
Food Catering	C	§501.11
Food Services Without Drive-Through	O10	
Fuel Service - Minor	C	§501.18
Healthcare Practitioners Office	O6,O10	
Hotels and Motels	O10	
Laundromat	O10	
Membership Club	C	§501.16
Mixed Use Building	O6,O10	
Personal Service Establishments	P	
Pet Grooming Facilities	O10	
Photocopy Service	O10	
Private Parking Lot or Structure	P	
Recreational, Sports and Entertainment Facilities (Private)		
Exercise & Fitness Centers	O6,O10	
Sport & Field Complexes	O6	
Retail, Large-Scale	C	§501.20
Retail, Small-Scale	P	
Specialty Home	C	
Studios/Gallery for Teaching, Dancing, Art, Music or Similar Cultural Pursuits	P	
Theater and Auditorium	O10	
Veterinary Office	O10	

Institutional Uses		
Life Care Facilities	C	§501.34
Group Child Care Facilities	C	§501.52
Museums	P	
Place of Worship/Place of Assembly	P	
Schools	P	
Skilled Nursing	C	§501.34
Municipal/Public Uses		
Administrative Offices of County, State or Federal Government (Office)	P	
Libraries	P	
Municipal Buildings and Uses	P	
Fire/Emergency Services	P	
Parks, Playgrounds & Recreation	P	
Utility Service Structures	P	
Utility Buildings	P	
Agricultural/Conservation Uses		
Agricultural Uses	P	
Cemeteries		
Conservation Areas & Uses	P	
Miscellaneous		
Uses similar to specified permitted uses	C	§501.40
Unique Buildings	C	§501.44
Affordable Housing Density Option	P	

Table 27: Palmdale Mixed Use Dimensions

					Overlay 10
A	Minimum Lot Width (FT)			40	
B	Minimum Lot Depth (FT)			150	
C	Minimum Non-res. Lot Area			N/A	
SETBACKS (FT)	PRINCIPAL STRUCTURE	D Front	Min	20	
			Max	N/A	
		E Side	Min	5	
		F Rear	Min	25	
	ACCESSORY (minimum)		Front	20	
			Side	5	
			Rear	5	
MAX HEIGHT (FT)	G Principal Structure			45	
	H Accessory Structure			20	
Maximum Impervious Coverage				45%	60%
Minimum Vegetated Coverage				45%	30%
RESIDENTIAL DENSITY	SFDD/SFSD/TFDD			7 DU/ NDA	
	SFAD (townhouse)			8 DU/ NDA	
	Apartments			12 DU/ NDA	
	Senior Apartments			15 DU/ NDA	

Figure 11: Palmdale Mixed Use Lot Dimensional Diagram

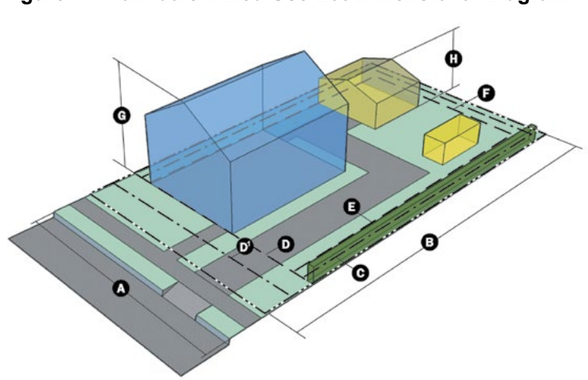

from 5-4-16 public release

§225-314 Palmdale Mixed Use.

Table 25: Palmdale Mixed Use Uses

Residential Uses		
Single-family Detached Dwelling	P	
Single-family Semidetached Dwelling	P	
Single-family Attached Dwelling	O6,O8	
Single Family Conversion	C	§501.1
Two-family Detached Dwelling	O6,O8	
Multifamily Apartment Dwellings	O6,O8, O10	
Bed & Breakfast Home	SE	§502.1
Farm Home Occupation	SE	§502.2
Family Child Care Home	SE	§502.3
Mobile Home Park	C	§501.5
Private Community Facilities/Recreation	P	
Commercial Uses		
Automotive Car Wash/Lubrication Facilities	C	§501.6
Business & Professional Offices	P	
Commercial Parking Lot or Structure	P	
Communications Antenna, Building-	P	
Communications Antenna, Towers < 50	P	
Communications Antenna, Towers > 50	SE	§502.5
Communications Antenna, Co-located	P	
Retail Bakery	P	
Dry Cleaning Service, Retail	P	
Food Services Without Drive-Thru	O10	
Food Trucks	O10	
Financial Institutions	O10	
Food Catering	C	§501.11
Funeral Homes	C	§501.
Healthcare Practitioners Office	O6, O8,O10	
Hotels & Motels	O10	
Landscaping & Garden Center - retail	C	§501.15
Laundromat	O8,O10	
Membership Club	C	§501.16
Mixed Use Building	O6, O8,O10	
Personal Service Establishments	P	
Pet Grooming Facilities	O8,O10	
Photocopy Service	O8,O10	
Private Parking Lot or Structure	P	
Recreational, Sports & Entertainment Facilities (Private)		
Exercise & Fitness Centers	O6,O8, O10	
Sport & Field Complexes	O10	
Retail, Large-Scale	C	§501.29
Retail, Small-Scale	P	
Specialty Home as CU	O10	
Studios/Gallery for Teaching, Dancing, Art, Music or Similar Cultural Pursuits	P	
Theater & Auditorium	O8,O10	
Veterinary Office	O8,O10	
Institutional Uses		
Life Care Facilities	C	§501.34
Group Child Care Facilities	C	§501.
Museums	P	
Skilled Nursing	C	§501.34
Place of Worship/Place of Assembly	P	
Schools	P	
Municipal/Public Uses		
Administrative Offices Of County, State	P	
Libraries	P	
Municipal Buildings/Uses	P	
Fire/Emergency Services	P	
Parks, Playgrounds & Recreation	P	
Utility Service Structures	P	
Utility Buildings	P	
Agricultural/Conservation Uses		
Agricultural Uses	P	
Conservation Areas & Uses	P	

Map 16: Zoning District Map - Palmdale Mixed Use

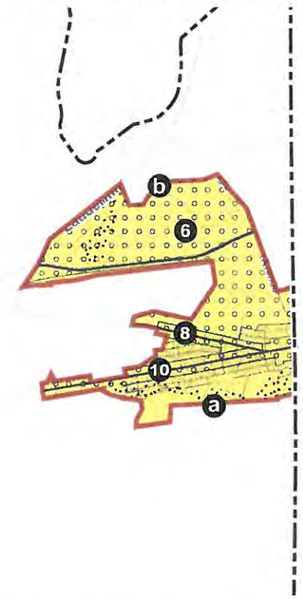

Overlays

- Environmental Overlays
- 6 Palmdale Future Development Area
- 8 Derry Road
- 10 East Chocolate Avenue

Development Approval Area

- a Central Site Development Approval Area
- b North/South Master Plan Approval Area

Table 26: Palmdale Mixed Use Dimensions

A Minimum Lot Width (FT)				40
B Minimum Lot Depth (FT)				~~100~~ 150'
C Minimum Lot Area				N/A
SETBACKS (FT)	PRINCIPAL STRUCTURE	D Front	MIN	20
			MAX	N/A
		E Rear/Side	MIN	5
		F	MIN	~~5~~ 25'
	~~PARKING~~ ACCESSORY (Minimum)		FRONT	20
			SIDE	5
			REAR	5
MAX HEIGHT (FT)	G PRINCIPAL STRUCTURE			45
	H ACCESSORY STRUCTURE			20
Maximum Impervious Coverage				~~80%~~ 45%
MIN VEGETATIVE COVER				45%

OVERLAY 10: 60%; 30%

Figure 12: Palmdale Mixed Use Lot Dimensional Diagram

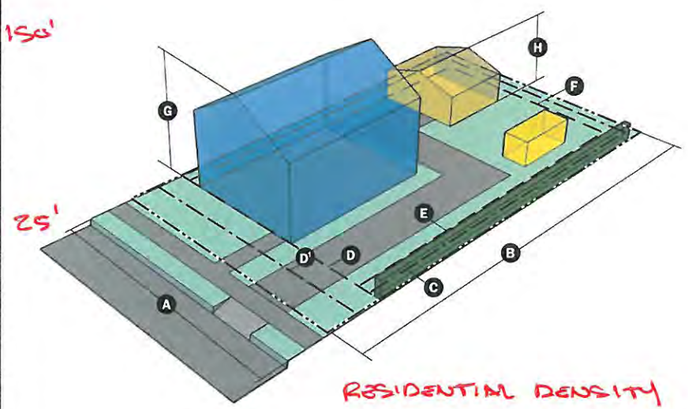

RESIDENTIAL DENSITY

SFDD/SFSD/TFDD	7DU/NDA
SFAD	8DU/NDA
APARTMENTS	12DU/NDA
SENIOR APARTMENTS	15DU/NDA

~~**Accessory Uses**: Accessory Dwelling; Family Day Care (Youth/Adult); Satellite Antenna; Essential Services; Home-based Business, No Impact; Parking Lot, Private Off-Street; Parking Lot, Public Off-Street; Parking Structure, Private; Parking Space(s), Private Off-Street; Outdoor Cafes; Personal Services; Sidewalk Cafes; Solar Collectors and Solar-related Equipment; Swimming Pools; Wind Energy Conversion Systems; Vehicle Rental~~

Note: Uses Similar to Specified Permitted Uses and Unique Buildings available by Conditional Use Approval

RESIDENTIAL DIMENSIONS	SFDD & TFDD	SFSD	SFAD	APARTMENT
FRONT	25	25	25	25
SIDE	10	10 (1 side)	10 (ends)	15
REAR	30	30	35	30
MIN. LOT WIDTH	40	30	20	125
MIN. LOT DEPTH	150	150	150	150

§ 225-315 Hershey Mixed Use

Map 17: Zoning District - Hershey Mixed Use

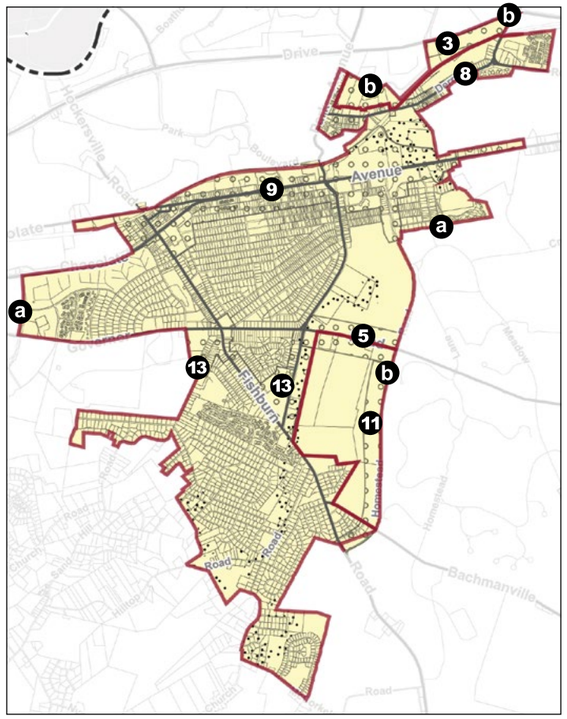

Overlays

- Environmental Overlays
- 3 Hersheypark Drive/ Route 39
- 5 Governor Road
- 8 Derry Road
- 9 Downtown Core
- 10 East Chocolate Avenue
- 11 Homestead/Fishburn Roads
- 13 Southern Core

Approval Areas

- a Central Master Plan Approval Area
- b North/SouthMaster Plan Approval Area

Table 29: Hershey Mixed Use Dimensions

					Overlay 9	Overlay 14
A	Minimum Lot Width (FT)			40		
B	Minimum Lot Depth (FT)			100		
C	Minimum Non-res. Lot Area			N/A		
SETBACKS (FT)	PRINCIPAL STRUCTURE	D Front	Min	20		
			Max	N/A		
		E Side	Min	5		
		F Rear	Min	5		
	ACCESSORY (minimum)		Front	50		
			Side	5		
			Rear	5		
MAX HEIGHT (FT)	G Principal Structure			60		
	H Accessory Structure			20		
Maximum Impervious Coverage				45%	85%	60%
Minimum Vegetated Coverage				45%	5%	30%
RES. DENSITY	SFDD/SFSD/TFDD			7 DU/ NDA		
	Apartments & Mixed Use Buildings			49 DU/ NDA		

Figure 12: Hershey Mixed Use Lot Dimensional Diagram

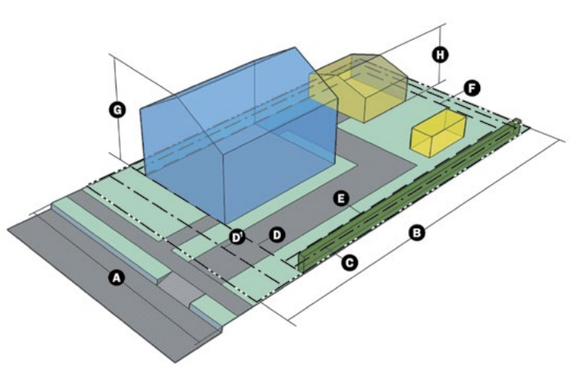

§ 225-315 Hershey Mixed Use

9-7-16 release

Table 28: Hershey Mixed Use Uses

Residential Uses		
Single-family Detached Dwelling	P	
Single-family Semidetached Dwelling	P	
Single-family Attached Dwelling (Townhouse)	C	§501.3
Single Family Conversion	C	§501.1
Two-family Detached Dwelling	P	
Multifamily Apartment Dwellings	C	§501.2
Bed and Breakfast Home	SE	§502.1
Farm Home Occupation	SE	§502.2
Family Child Care Home	SE	§502.3
Private Community Facilities/Recreation Areas	P	
Home Occupations	P	
No-Impact Home Based Business	P	
Accessory Dwelling Units	SE	§502.9
Commercial Uses		
Automotive Car Wash/Lubrication Facilities	C	§501.6
Bakery, Retail	P	
Business and Professional Offices	P	
Commercial Parking Lot or Structure	P	
Communications Antenna, Towers < 50 ft	P	
Communications Antenna, Co-located	P	
Dry Cleaning Service, Retail	P	
Financial Institutions	O9,O13	
Food Catering	C	§501.11
Food Services Without Drive-Through	O9,O13 O8	
Fuel Service - Minor	C	§501.18
Fuel Service - Major	C	§501.19
Funeral Homes	C	§501.49
Guest Lodging, Dining and Conference Facilities	C	§502.7
Healthcare Practitioners Office	P	
Hotels and Motels	O9,O13	
Laundromat	P	
Membership Club	C	§501.16
Micro-distilleries/Breweries	O9	
Mixed Use Building	P	
Personal Service Establishments	P	
Pet Grooming Facilities	O9,O13	
Photocopy Service	O9	
Private Parking Lot or Structure	P	
Recreational, Sports and Entertainment Facilities		
Country Club	P	
Exercise & Fitness Centers	O9,O8, O13	
Retail, Large-Scale	C	§501.29
Retail, Small-Scale	P	

Commercial Uses		
Specialty Home	C	§501.20
Studios/Gallery for Teaching, Dancing, Art, Music or Similar Cultural Pursuits	P	
Theater and Auditorium	O9,O13	
Veterinary Office	O9,O13	
Visitor Center	P	
Institutional Uses		
Life Care Facilities	C	§501.34
Group Child Care Facilities	C	§501.52
Museums	P	
Place of Worship/Place of Assembly	P	
Schools	P	
Skilled Nursing	C	§501.34
Municipal/Public Uses		
Administrative Offices of County, State or Federal Government (Office)	P	
Libraries	P	
Municipal Buildings and Uses	P	
Fire/Emergency Services	P	
Parks, Playgrounds & Recreation	P	
Utility Service Structures	P	
Utility Buildings	P	
Agricultural/Conservation Uses		
Agricultural Uses	P	
Conservation Areas & Uses	P	
Miscellaneous		
Uses similar to specified permitted uses	C	§501.40
Unique Buildings	C	§501.44
Affordable Housing Density Option	P	

from 5-4-16 public release

§225-315 Hershey Mixed Use.

Table 27: Hershey Mixed Use Uses

Residential Uses			Pet Grooming Facilities	O9	
Single-family Detached Dwelling	P		Private Parking Lot or Structure	P	
Single-family Semidetached Dwelling	P		Recreational, Sports & Entertainment		
Single-family Attached Dwelling	O9		*Country Club*	P	
Single Family Conversion	C	§501.1	*Exercise & Fitness Centers*	O9	
Two-family Detached Dwelling	O9		*Golf Courses (Conventional & Special)*	O8	
Multifamily Apartment Dwellings	O9		Retail, Large-Scale	C	§501.29
Bed & Breakfast Home	SE	§502.1	Retail, Small-Scale	P	
Farm Home Occupation	SE	§502.2	Specialty Home as CU	O9	
Family Child Care Home	SE	§502.3	Studios/Gallery for Teaching, Dancing, Art, Music or Similar Cultural Pursuits	P	
Private Community Facilities/Recreation	P		Theater & Auditorium	O9	
Commercial Uses					
Automotive Car Wash/Lubrication Facilities	C	§501.6			
Business & Professional Offices	P		Veterinary Office	O9	
Commercial Parking Lot or Structure	P		Visitor Center	P	
Communications Antenna, Towers < 50	P		**Institutional Uses**		
Communications Antenna, Co-located	P		Life Care Facilities	C	§501.35
Retail Bakery	P		Group Child Care Facilities	C	§501.
Dry Cleaning Service, Retail	P		Museums	P	
Financial Institutions	O9		Skilled Nursing	C	§501.35
Food Catering	C	§501.11	Place of Worship/Place of Assembly	P	
Food Services Without Drive-Thru	O9		Schools	P	
Food Trucks	O9		**Municipal/Public Uses**		
Fuel Service – Minor	C		Administrative Offices Of County, State or	P	
Funeral Homes	C	§501.	Libraries	P	
Guest Lodging, Dining & Conference	SE	§502.7	Municipal Buildings/Uses	P	
Healthcare Practitioners Office	O9		Fire/Emergency Services	P	
Hotels & Motels	O9		Parks, Playgrounds & Recreation	P	
Landscaping & Garden Center - retail	C	§501.15	Utility Service Structures	P	
Laundromat	O9		Utility Buildings	P	
Membership Club	C	§501.16	Utility Administration Facilities (Office)	P	
Micro-distilleries/Breweries	O9		**Agricultural/Conservation Uses**		
Mixed Use Building	O9		Agricultural Uses	P	
Personal Service Establishments	P		Conservation Areas & Uses	P	

~~**Accessory Uses**: Accessory Dwelling; Family Day Care (Youth/Adult); Satellite Antenna; Essential Services; Home-based Business, No Impact; Parking Lot, Private Off-Street; Parking Lot, Public Off-Street; Parking Structure, Private; Parking Space(s), Private Off-Street; Outdoor Cafes; Personal Services; Sidewalk Cafes; Solar Collectors and Solar-related Equipment; Swimming Pools; Wind Energy Conversion Systems~~

Note: Uses Similar to Specified Permitted Uses and Unique Buildings available by Conditional Use Approval

Map 17: Zoning District Map – Hershey Mixed Use

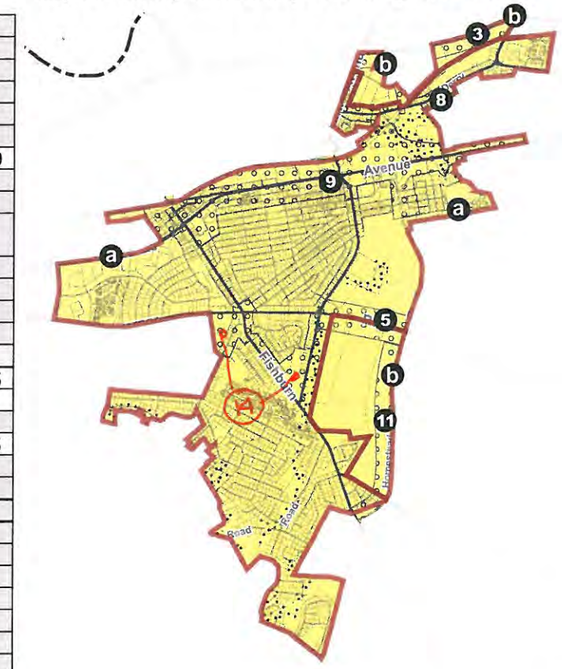

Overlays

- Environmental Overlays
- 3 Hersheypark Drive/Route 39
- 5 Governor Road
- 8 Derry Road
- 9 West Chocolate Avenue
- 10 East Chocolate Avenue
- 11 Homestead/Fishburn Roads
- 14 SOUTHER CORE

Development Approval Area

- a Central Site Development Approval Area
- b North/South Master Plan Approval Area

Table 28: Hershey Mixed Use Dimensions

A	Minimum Lot Width (FT)				40		
B	Minimum Lot Depth (FT)				100		
C	Minimum Lot Area				N/A		
SETBACKS (FT)	PRINCIPAL STRUCTURE	D Front	MIN	20			
			MAX	N/A			
		E Side	MIN	5			
		F Rear	MIN	5			
	ACCESSORY PARKING (Minimum)		FRONT	~~20~~ 5d			
			SIDE	5			
			REAR	5			
MAX HEIGHT (FT)	G PRINCIPAL STRUCTURE			60			
	H ACCESSORY STRUCTURE			20			
Maximum Impervious Coverage				~~60%~~	45%	85%	60%
MIN. VEGETATIVE COVER				~~N/A~~	45%	5%	30%

Figure 13: Hershey Mixed Use Lot Dimensional Diagram

RESIDENTIAL DENSITY
SFDD/SFSD/SFAD/TFDD 7DU/NDA

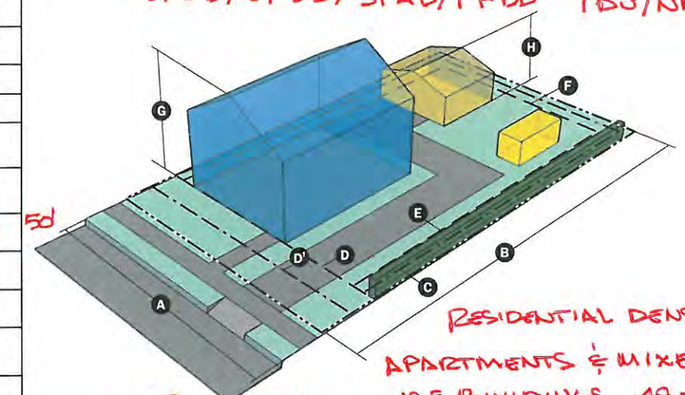

09 014

RESIDENTIAL DENSITY
APARTMENTS & MIXED USE BUILDINGS 49DU/NDA

9-7-16 release

§ 225-316 Limited Compatibility

Map 18: Zoning District - Limited Compatibility

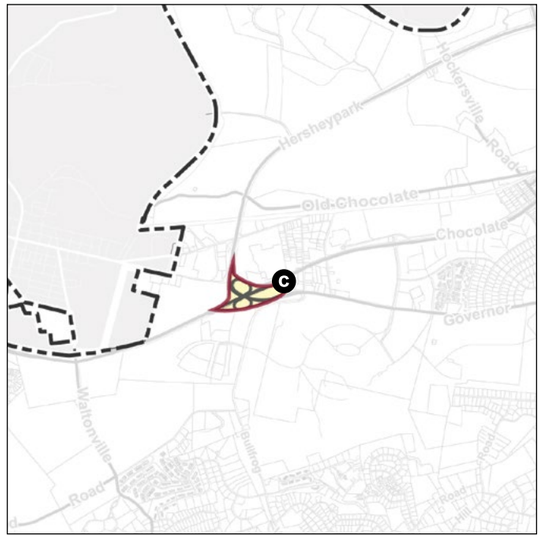

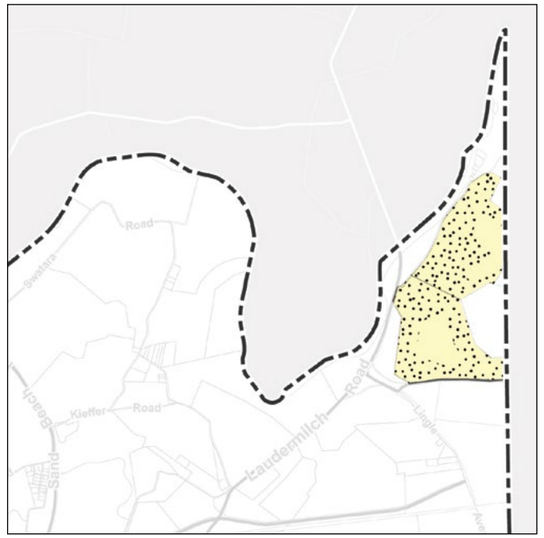

Overlays

Environmental Overlays

Approval Areas

C West Master Plan Approval Area

Table 31: Limited Compatibility Dimensions

A	Minimum Lot Width (FT)			350
B	Minimum Lot Depth (FT)			350
C	Minimum Non-res. Lot Area			5 ac
SETBACKS (FT)	PRINCIPAL STRUCTURE	D Front	Min	50
			Max	N/A
		E Side	Min	50
		F Rear	Min	50
MAX HEIGHT (FT)	G Principal Structure			40
	Accessory Structure			N/A
Maximum Impervious Coverage				60%
Minimum Vegetated Coverage				30%

Figure 13: Limited Compatibility Lot Dimensional Diagram

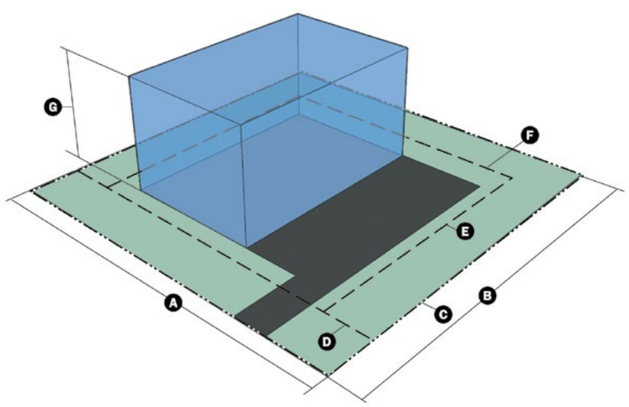

Table 30: Limited Compatibility Uses

Residential Uses		
Farm Home Occupation	SE	§502.2
No-Impact Home Based Business	P	
Accessory Dwelling Units	SE	§502.9
Commercial Uses		
Communications Antenna, Building-mounted	P	
Communications Antenna, Towers < 50 ft	P	
Communications Antenna, Towers > 50 ft	SE	§502.5
Communications Antenna, Co-located	P	
Fuel Service - Minor	P	
Fuel Service - Major	P	
Kennel	P	
Motor Vehicle Fuel, Wholesale	P	
Recreational, Sports and Entertainment Facilities		
Archery & Shooting Ranges, Indoor	C	§501.22
Archery & Shooting Ranges, Outdoor	C	§501.23
Casinos & Gambling Facilities	C	§501.25
Sexually Oriented Businesses	C	§501.39
Industrial Uses		
Manufacturing	C	§501.31A
Truck Terminals	C	§501.32
Waste Management Facilities	C	§501.33
Institutional Uses		
Group Home for Persons with Disabilities	C	§501.35
Group Home for Persons without Disabilities	C	§501.35
Incinerators and Crematoriums	C	§501.54
Medical-related Research Facilities	P	
Other Scientific Research, Development and Training Facilities	P	
Place of Worship/Place of Assembly	P	
Prisons	P	
Schools	P	

Municipal/Public Uses		
Administrative Offices of County, State or Federal Government (Office)	C	§501.46
Libraries	P	
Municipal Buildings and Uses	P	
Fire/Emergency Services	P	
Parks, Playgrounds & Recreation	P	
Utility Service Structures	P	
Recycling Center	C	§501.37
Agricultural/Conservation Uses		
Agricultural Uses	P	
Conservation Areas & Uses	P	
Miscellaneous		
Uses similar to specified permitted uses	C	§501.40
Billboard	C	§501.41
Unique Buildings	C	§501.44
Wind Energy Conversion Systems (Principal Use)	P	
Solar Panel Arrays (Principal Use)	P	

from 5-4-16 public release

§225-317 Limited Compatibility.

Table 31: Limited Compatibility Uses

Residential Uses		
Farm Home Occupation	SE	§502.2
Commercial Uses		
Communications Antenna, Building-mounted	P	
Communications Antenna, Towers < 50	P	
Communications Antenna, Towers > 50	SE	§502.5
Communications Antenna, Co-located	P	
Fuel Service – Minor and Major	P	
Kennel	P	
Motor Vehicle Fuel, Wholesale	P	
Recreational, Sports & Entertainment Facilities (Private)		
Archery & Shooting Ranges	C	§501.22
Casinos & Gambling Facilities	C	§501.225
Manufacturing	C	§501.31
Sexually Oriented Businesses	C	§501.39
Truck Terminals	C	§501.32
Waste Management Facilities	C	§501.33
Institutional Uses		
Group Home for Persons with Disabilities	C	§501.35
Group Home for Persons without	C	§501.35
Incinerators & Crematoriums for On-Site Generated Medical Wastes	C	§501._
Medical-related Research Facilities	P	
Other Scientific Research, Development & Training Facilities	P	
Place of Worship/Place of Assembly	P	
Prisons	P	
Schools	P	
Municipal/Public Uses		
Administrative Offices Of County, State or Federal Government (Office)	C	§501.46
Libraries	P	
Municipal Buildings/Uses	P	
Fire/Emergency Services	P	
Parks, Playgrounds & Recreation	P	
Utility Service Structures	P	
Recycling Center	C	§501.37
Agricultural/Conservation Uses		
Agricultural Uses	P	
Conservation Areas & Uses	P	
Miscellaneous		
Billboard	C	§501.41

~~**Accessory Uses**: Car Wash; Satellite Antenna; Essential Services; Parking Lot, Public Off-Street; Parking Structure, Private; Parking Space(s), Private Off-Street; Personal Services; Solar Collectors and Solar-related Equipment; Wind Energy Conversion Systems; Vehicle Rental~~

Note: Uses Similar to Specified Permitted Uses and Unique Buildings available by Conditional Use Approval

Map 19: Zoning District Map - Limited Compatibility

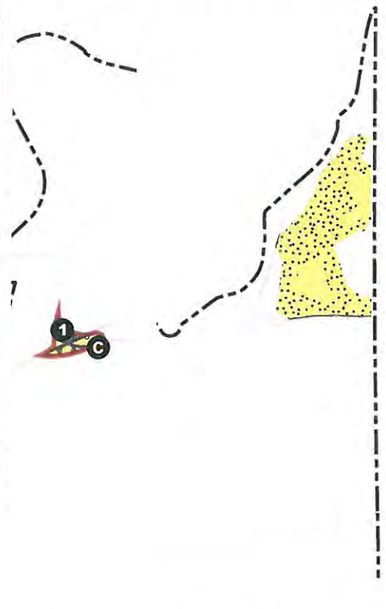

Overlays

Environmental Overlays

Route 322/422

Development Approval Area

C West Master Plan Approval Area

Table 32: Limited Compatibility Dimensions

A Minimum Lot Width (FT)			350
B Minimum Lot Depth (FT)			350
C Minimum Lot Area			5 ac
SETBACKS (FT)	PRINCIPAL STRUCTURE D Front	MIN	50
		MAX	N/A
	PRINCIPAL STRUCTURE E Side	MIN	50
	PRINCIPAL STRUCTURE F Rear	MIN	50
	~~PARKING (Minimum)~~	~~FRONT~~	~~20~~
		~~SIDE~~	~~15~~
		~~REAR~~	~~20~~
MAX HEIGHT (FT)	G PRINCIPAL STRUCTURE		40
	ACCESSORY STRUCTURE		N/A
Maximum Impervious Coverage			60%
MIN VEGETATIVE COVER			30%

Figure 15: Limited Compatibility Lot Dimensional Diagram

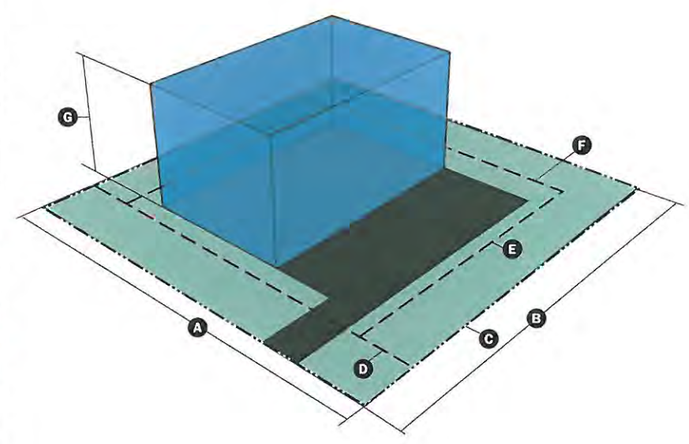

§ 225-317 Industrial Use

Map 19: Zoning District - Industrial

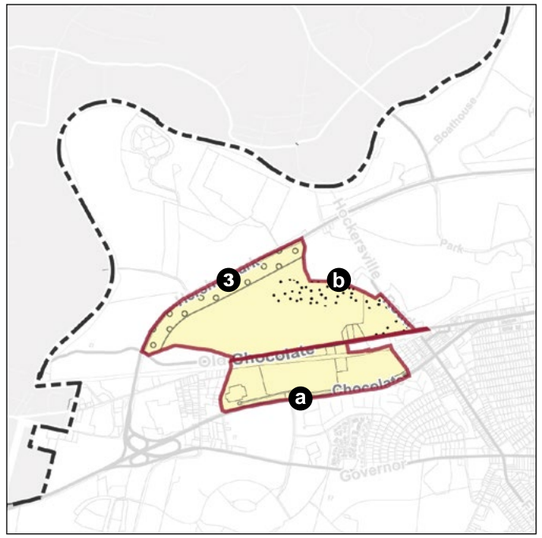

Overlays

- Environmental Overlays
- 3 Hersheypark Drive/ Route 39

Approval Areas

- a Central Master Plan Approval Area
- b North/SouthMaster Plan Approval Area

Table 33: Industrial Dimensions

A	Minimum Lot Width (FT)			125
B	Minimum Lot Depth (FT)			175
C	Minimum Non-res. Lot Area			1 ac
SETBACKS (FT)	PRINCIPAL STRUCTURE	D Front	Min	40
			Max	N/A
		E Side	Min	40
		F Rear	Min	40
MAX HEIGHT (FT)	G Principal Structure			95[1]
	Accessory Structure			N/A
Maximum Impervious Coverage				60%
Minimum Vegetated Coverage				30%

Figure 14: Industrial Use Lot Dimensional Diagram

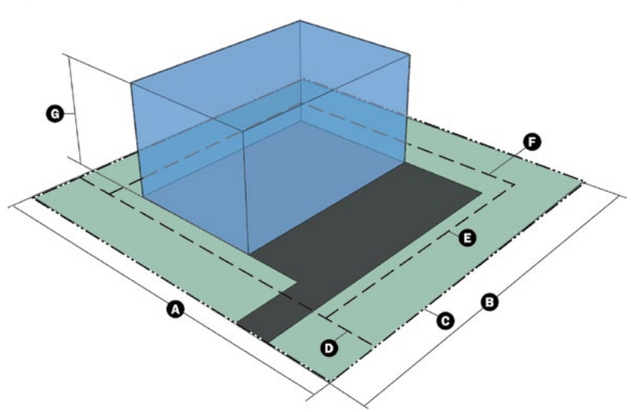

§ 225-317 Industrial Use

9-7-16 release

Table 32: Industrial Uses

Residential Uses		
Farm Home Occupation	SE	§502.2
Private Community Facilities/Recreation Areas	P	
No-Impact Home Based Business	P	
Accessory Dwelling Units	SE	§502.9
Commercial Uses		
Automobile and Truck Leasing/Rental	P	
Automotive Car Wash/Lubrication Facilities	P	
Business and Professional Offices	P	
Commercial Laundry	P	
Communications Antenna, Building-mounted	P	
Communications Antenna, Towers < 50 ft	P	
Communications Antenna, Towers > 50 ft	SE	§502.5
Communications Antenna, Co-located	P	
Crematory	P	
Food Catering	P	
Fuel Service - Minor	P	
Fuel Service - Major	P	
Heliport	C	§501.14
Kennel	P	
Landscape and Garden Service - non-retail	P	
Motor Vehicle Fuel, Wholesale	P	
Private Parking Lot or Structure	P	
Recreational, Sports and Entertainment Facilities		
Recreation Facilities for Employees, Faculty & Students	P	
Rental and Leasing Businesses	P	
Research/Technology Business Incubator	C	§501.36
Service and Repair Facilities	P	
Taxidermy	P	
Industrial Uses		
Assembling	P	
Crematory	P	
Production Bakery	P	
Commercial/Industrial Laundering and Dry-Cleaning Facilities	P	
Grain Milling	P	
Importing & Exporting Establishments	P	
Industrial Equipment Sales & Repair	P	
Laboratories	P	
Machine Shop	P	
Manufacturing	P	
Mineral Extraction	C	§501.31B
Printing and Publishing	P	
Processing	P	
Self-storage facilities	P	
Solid, Liquid or Gas Fuel Dealers	P	
Solid or Liquid Waste Transfer Stations	P	

Industrial Uses		
Storage, Including Fuel Storage	P	
Warehousing	P	
Welding Shop	P	
Wholesale Trade Establishments	P	
Wood Millworks	P	
Institutional Uses		
Incinerators and Crematoriums	C	§501.54
Medical-related Research Facilities	P	
Museums		
Other Scientific Research, Development and Training Facilities	C	§ 501.53
Municipal/Public Uses		
Administrative Offices of County, State or Federal Government (Office)	P	
Municipal Buildings and Uses	P	
Fire/Emergency Services	P	
Parks, Playgrounds & Recreation	P	
Utility Service Structures	P	
Utility Buildings	P	
Sewage Treatment Plants	C	§501.38
Agricultural/Conservation Uses		
Agricultural Uses	P	
Conservation Areas & Uses	P	
Miscellaneous		
Uses similar to specified permitted uses	C	§501.40
Billboard	C	§501.41
Unique Buildings	C	§501.44
Wind Energy Conversion Systems (Principal Use)	P	
Solar Panel Arrays (Principal Use)	P	

from 5-4-16 public release

§225-318 Industrial.

able 33: Industrial Uses

Residential Uses		
Farm Home Occupation	SE	§502.2
Private Community Facilities/Recreation	P	
Commercial Uses		
Automobile & Truck Leasing/Rental	P	
Automotive Car Wash/Lubrication Facilities	P	
Business & Professional Offices	P	
Commercial Laundry	P	
Communications Antenna, Building-mounted	P	
Communications Antenna, Towers < 50 feet	P	
Communications Antenna, Towers > 50 feet	SE	§502.5
Communications Antenna, Co-located	P	
Food Catering	P	
Fuel Service Minor and Major	P	
Heliport	C	§501.14
Kennel	P	
Landscape & Garden Service - non-retail	P	
Private Parking Lot or Structure	P	
Rental & Leasing Businesses	P	
Research/Technology Business Incubator	C	§501.36
Motor Vehicle Fuel, Wholesale	P	
Recreational, Sports and Entertainment Facilities (Private)		
Recreation Facilities for Employees, Faculty &Students	P	
Service & Repair Facilities	P	
Taxidermy	P	
Industrial Uses		
Assembling	P	
Production Bakery	P	
Industrial Laundering & Dry-Cleaning	P	
Grain Milling	P	
Importing & Exporting Establishments	P	
Industrial Equipment Sales & Repair	P	
Laboratories	P	
Machine Shop	P	
Manufacturing	P	
Mineral Extraction	C	§501.31
Printing and Publishing	P	
Processing	P	
Self-storage Facilities	P	
Solid, Liquid or Gas Fuel Dealers	P	
Solid or Liquid Waste Transfer Stations	P	
Storage, Including Fuel Storage	P	
Warehousing	P	
Welding Shop	P	
Wholesale Trade Establishments	P	
Lumber Mill (Saw Mill)	P	
Institutional Uses		
Incinerators & Crematoriums for On-Site Generated Medical Wastes	C	§501._
Medical-related Research Facilities	P	
Other Scientific Research, Development & Training Facilities	C	§501._
Municipal/Public Uses		
Administrative Offices Of County, State or Federal Government (Office)	P	
Municipal Buildings/Uses	P	
Fire/Emergency Services	P	
Parks, Playgrounds & Recreation	P	
Utility Service Structures	P	
Utility Buildings	P	
Sewage Treatment Plants	C	§501.38
Agricultural/Conservation Uses		
Agricultural Uses	P	
Conservation Areas & Uses	P	
Miscellaneous		
Billboard	C	§501.41

~~**Accessory Uses**: Car Wash; Satellite Antenna; Essential Services; Parking Lot, Private Off-Street; Parking Lot, Public Off-Street; Parking Structure, Private; Parking Space(s), Private Off-Street; Outdoor Wood Furnace; Solar Collectors and Solar-related Equipment; Wind Energy Conversion Systems; Vehicle Rental~~

Note: Uses Similar to Specified Permitted Uses and Unique Buildings available by Conditional Use Approval

Map 20: Zoning District Map - Industrial

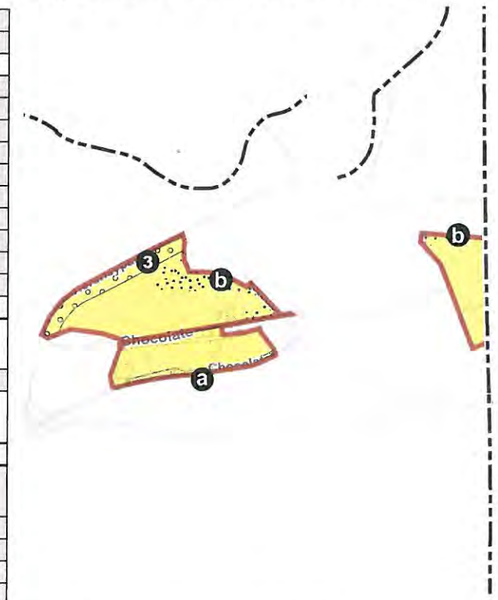

Overlays

Environmental Overlays

Hersheypark Drive/Route 39

Hersheypark

Development Approval Area

a Central Site Development Approval Area

b North/South Master Plan Approval Area

Table 34: Industrial Dimensions

A Minimum Lot Width (FT)			125/~~300~~
B Minimum Lot Depth (FT)			175/~~300~~
C Minimum Lot Area			1 ac/ ~~50 ac~~
SETBACKS (FT)	PRINCIPAL STRUCTURE	D Front	MIN 40
			MAX N/A
		E Side	MIN 40
		F Rear	MIN 40
	~~PARKING (Minimum)~~		~~FRONT 25~~
			~~SIDE 20~~
			~~REAR 25~~
MAX HEIGHT (FT)	G PRINCIPAL STRUCTURE		95 1
	ACCESSORY STRUCTURE		N/A
Maximum Impervious Coverage			60%
MIN. VEGETATIVE COVER			30%

Figure 16: Industrial Lot Dimensional Diagram

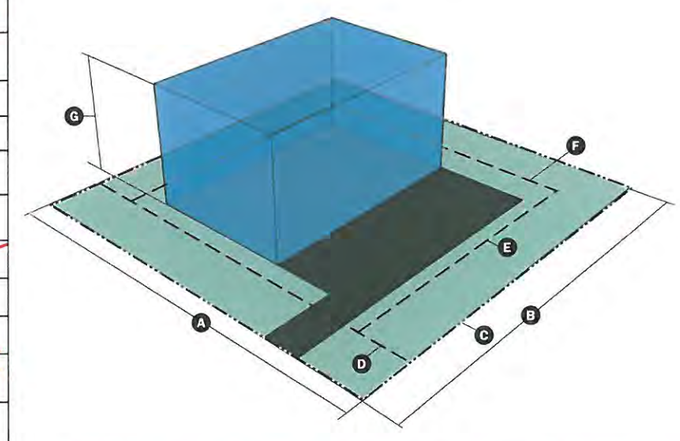

1 SEE 225-417 FOR HEIGHT EXCEPTION

Article IV
Performance Standards and Supplementary Regulations

§225-403401. Overlay Criteria.[BJW1]

§225-403401.1. Thoroughfares.

§225-403401.1.A. Planned Campus West Future Development Area, Overlay 7

1. Applicants proposing development on lots or the portions of lots thereof within the designated Planned Campus West Future Development Area Overlay shall be permitted to apply for land uses as designated with an "O" on the Zoning Ordinance Land Use Table, in the applicable base zoning district.

2. Applicants shall present a plan that identifies the location and manner in which the overall transporation network and points of connections align with Township's Official Map and overall Comprehensive Plan

1.3. AApplicants shall delineate the manner and locations in which stormwater management impacts from development will be addressed and how such design solutions align with the Township's Stormwater Management requirements. Access Management and Stormwater Management Issues

§225-403401.1.B. Derry Road, Overlay 8

1. Applicants proposing development on lots or the portions of lots thereof within the designated Derry Road Overlay shall be permitted to apply for land uses as designated with an "O#" on the Zoning Ordinance Land Use Table, in the applicable base zoning district. Sidewalk connections shall be provided where feasible, unless technically infeasible;, however, heritage features, such as limestone walls, shall not be removed expressly to accommodate sidewalks. Landscaping buffering parking lots adjacent to the yard area, per Section 225-401402, shall be provided and shall be designed to clearly define points of lot access.

2. Landscaping as required by this Chapter for parking provided on the lot is permitted to be placed entirely along the perimeter of areas designated for parking.

1.

§225-403401.1.C. Palmdale Chocolate Avenue, Overlay 10

1. Applicants proposing development on lots or the portions of lots thereof within the designated Palmdale Chocolate Avenue Overlay shall be permitted to apply for land uses as designated with an "O" on the Zoning Ordinance Land Use Table, in the applicable base zoning district.

2. Bike lanes, sidewalks, or a combination thereof shall be provided, where unless technically infeasible, by applicants proposing development.

3. Landscaping for parking provided on a Lot.

   a. Landscaping as required by this Chapter for parking provided on the lot is permitted to be placed entirely along the perimeter of areas designated for parking.

   b. Along the East Chocolate Avenue right-of-way, a Class 5 or Class 6 landscape screen shall be provided to buffer areas of parking and the public realm from one another and to reinforce areas of pedestrian and vehicular safety, but shall be designed to clearly define points of lot access.

§225-403401.1.D. Governor Road, Overlay 5

1. Applicants proposing development on lots or the portions of lots thereof within the designated Governor Road Overlay shall provide shade trees along the perimeter of said lots contiguous to the Governor Road right-of-way in accordance with the follow:

    a. Newly planted shade trees shall be placed not less than 40 feet apart, and not more than 75 feet apart. They also shall not be placed less than 20 feet from a street intersection nor less than 12 feet from a fire hydrant, light standard or electric or telephone pole, and shall not be planted within three feet of a property line perpendicular to the street or common drive right-of-way.

    b. All shade trees shall be a minimum of 2" caliper measured 6" above the root collar.

    c. Such shade trees shall have no branches below a height of six feet measured from ground level.

    d. The developer shall select the species of shade trees to be planted from the Township approved shade tree list included in Chapter **201**, Trees. The Township may require a particular species which is better suited to street tree applications or to provide for continuity of existing nearby shade tree planting.

    e. Depending on the species of shade trees proposed to be provided, the Township may require root control devices or material to minimize the effect of root growth on sidewalks, curbs, walkways, bike trails, and underground utilities.

2. Within the Overlay, allocated space shall be dedicated to the Township's overall system/network for pedestrian connectivity. Construction of bike paths and sidewalks shall occur in conformance with Derry Township Construction Standards and the Official Map.

§225-403401.1.E. Hersheypark, Overlay 4

1. Applicants proposing development on lots or the portions of lots thereof within the designated Hersheypark Overlay shall be permitted to apply for land uses as designated with an "O" on the Zoning Ordinance Land Use Table, in the applicable base zoning district.

2. In the Hersheypark Overlay, in lieu of interior parking lot landscaping requirements, access drives which fall within the minimum yard area must be landscaped in accordance with the following:

    a. The landscape planting shall be placed so that at maturity it shall not be closer than three feet from any public street or property line.

    b. The landscape planting shall consist of a mix annual and perennial materials.

    c. The landscaping may be a combination of earth berms, vegetation and fencing.

3. Furthermore, in the Hersheypark Overlay, new parking lot landscaping shall consist of peripheral landscaping having a minimum width of eight feet along a minimum of 50% of the periphery of the parking lot, which shall contain vegetative screening, including trees planted in number which would equal one tree per 100 feet, but not necessarily placed 100 feet on center, shrubs, perennials, grasses, ground cover, and annuals. Vegetation planted in this landscaping zone shall be chosen to grow to a height of not less than 2 1/2 feet.

§225-403401.1.F. Hersheypark Drive/Route 39 Overlay 3

1. Applicants proposing development on lots or the portions of lots thereof within the designated Hersheypark Drive/Route 39 Overlay shall provide a landscape buffer along the perimeter of said lots contiguous to the Hersheypark Drive/Route 39 right-of-way.

   a. A minimum of 40 feet of said dimension closest to the right-of-way line shall remain with natural vegetation or planted with turf grass only. If turf grass is the primary groundcover, that then trees shall be planted on 50 foot centers andwith a white fence to match existing established fencing in the overlay, shall be required.

   b. The landscape buffer shall consist of fencing in accordance with the following:

   i. A white fence, to match the existing established fencing on portions of Hersheypark Drive/Route 39.

   cb. No parking area shall be placed within 4 feet of a fence constructed in the Zoning Hersheypark Drive/Route 39 Overlay.

§225-403401.1.G. Homestead Road/Fishburn Road, Overlay 11

1. Applicants proposing development on lots or the portions of lots thereof within the designated Homestead Road/Fishburn Road Overlay shall provide a landscape buffer along the perimeter of said lots contiguous to the Homestead and Fishburn rights-of-way. The landscape buffer shall consist of canopy shade trees measuring meeting the following requirements:

   a. Newly planted shade trees shall be placed not less than 40 feet apart, and not more than 75 feet apart. They also shall not be placed less than 20 feet from a street intersection nor less than 12 feet from a fire hydrant, light standard or electric or telephone pole, and shall not be planted within three feet of a property line perpendicular to the street or common drive right-of-way.

   b. All shade trees shall be a minimum of 2" caliper measured 6" above the root collar.

   c. Such shade trees shall have no branches below a height of six feet measured from ground level.

   d. The developer shall select the species of shade trees to be planted from the Township approved shade tree list included in Chapter **201**, Trees. The Township may require a particular species which is better suited to street tree applications or to provide for continuity of existing nearby shade tree planting.

   e. Depending on the species of shade trees proposed to be provided, the Township may require root control devices or material to minimize the effect of root growth on sidewalks, curbs, walkways, bike trails, and underground utilities.

   1. 2 inch caliper measured 6" above the root collar placed maximum of fifty feet on center.

2. –Nonresidential parking shall be prohibited within the Zoning Overlay.

§225-403401.1.H. Middletown Road, Overlay 2

1. Applicants proposing development on lots or the portions of lots thereof within the designated Middletown Road Overlay shall be permitted to apply for land uses as designated with an "O" on the Zoning Ordinance Land Use Table. Within the overlay area, a 15-foot easement area shall be designated for the purposes of providing space for the future construction and road widening indicated on the Township's Official Map showing the community's pedestrian and bicycle facilities planning.

2. In order to minimize additional curb cuts within the Overlay district, all uses containing access to Middletown Road shall implement one of the following requirements:

   a. Vehicular access to parking areas shall be provided from service roads at the rear of the property. For corner lots, access may be provided to the parcel from a side street not accessing directly onto Middletown Road.

   b. Where a rear service road is not feasible, a shared access drive onto Middletown Road shall be constructed in order to provide a single access to two or more adjoining land uses.

   c. Where a new driveway or access road must connect to Middletown Road, is shall intersect at 90 degrees to Middletown Road, and must be in centerline alignment or must be offset 300' from any existing driveway, access road or street on the opposite side of Middletown Road.

   d. Where a new public street must connect to Middletown Road, is shall intersect at 90 degrees to Middletown Road, and must be in centerline alignment or must be offset 300' from any existing driveway, access road and 600' from any street on the opposite side of Middletown Road.

   ~~1. Address access management and stormwater issues.~~

§225-403401.1.I. Palmdale Future Development Area, Overlay 6

1. Applicants proposing development on lots or the portions of lots thereof within the designated Palmdale Future Development Area Overlay shall be permitted to apply for land uses as designated with an "O" on the Zoning Ordinance Land Use Table, in the applicable base zoning district.

2. To retain the established village-like character of the Palmdale area, proposed development shall extend the established street grid.

§225-403401.1.J. ~~Route 322/422~~Community Heritage Buffer, Overlay 1

1. In conjunction with the Thoroughfare Overlays designated within this Chapter and to continue the established pattern of community thoroughfares, the following buffer areas are hereby established and shall not be physically disturbed or used for any use, other than agricultural uses, conservation areas and uses for the conservation of open space, water, soil and wildlife resources and landscaping, except as may be necessary to provide ingress, egress and regress to a property or to enable utility placement:

   a. One hundred feet north of, and parallel to, the northern right-of-way line of Route 322 and the Route 322/422/39 cloverleaf between the Swatara Creek and East Main Street.

b. One hundred feet south of, and parallel to, the southern right-of-way line of Route 322 between the Swatara Creek and Bullfrog Valley Road.

c. One hundred feet west of, and parallel to, the western right-of-way line of Bullfrog Valley Road between the 322/422/39 cloverleaf and a point 600 feet north of Roush Road.

d. One hundred feet north of, and parallel to, the northern right-of-way line of Wood Road between Bullfrog Valley Road and a point 200 feet east of Middletown Road.

e. One hundred feet south of, and parallel to, the southern right-of-way line of Wood Road between Bullfrog Valley Road and a point 200 feet east of Middletown Road.

f. One hundred feet landward, and parallel to, the normal water line of the Derry Township side of the Swatara Creek or the 100-year floodway line of the Swatara Creek, whichever is the greater distance.

g. One hundred feet south of, and parallel to, the southern right-of-way line of Grove Street.

1. Applicants proposing development on lots or the portions of lots thereof within the designated Route 322/422 Overlay shall provide a landscape buffer along the perimeter of said lots contiguous to the Route 322/422 right-of-way. The landscape buffer shall be consistent with the Community Heritage Buffer, in size, and provide Class 1 or Class 2 plantings, as provided for in this Chapter.

§225-403401.1.K. Sand Hill Road, Overlay 12

1. Applicants proposing development on lots or the portions of lots thereof within the designated Sand Hill Road Overlay shall be permitted to apply for land uses as designated with an "O" on the Zoning Ordinance Land Use Table, in the applicable base zoning district.

2. Design of stormwater management facilities in this Overlay shall be considerate to the highly erodible soils of the Overlay district. The design of stormwater facilities shall include measures that eliminate the potential for soil erosion on the subject premises and premises downstream of any concentrated stormwater discharge.

3. No more than 25% of existing trees that contain a caliper of 18 inches or more shall be removed during construction activities on a property in this Overlay. Such trees shall be identified prior to any proposed tree removal. Any forestry activity approved by State measures shall not be required to comply with this requirement. [BW2]

§225-403401.1.L. Downtown Core, Overlay 9

1. Applicants proposing development on lots or the portions of lots thereof within the designated Downtown Core Overlay shall be permitted to apply for land uses as designated with an "O" on the Zoning Ordinance Land Use Table, in the applicable base zoning district.

2. Parking spaces shall not be permitted between the front building facade and the right-of-way line.

3. Landscaping for parking provided on a Lot.

   a. Landscaping as required by the Chapter for parking provided on the lot may be permitted to be placed to the perimeter of areas designated for parking.

b. Along the Palmdale Chocolate Avenue/Downtown CoreChocolate Avenue right-of-way, a Class 5 or Class 6 landscape screen shall be provided to distinguish areas of parking and the public realm parking from one another and reinforce areas of pedestrian and vehicular safety.

4. Additional Minimum Signage and Outdoor Improvement Data Required for Review.

a. Refer to §225-1009, and Chapter 99, Downtown Core Design Ordinance, of the Code of the Township of Derry for additional design review requirements.

b. The fee for review shall be in an amount as established from time to time by resolution of the Township Board of Supervisors.

a. Proposed signs or proposed alterations to existing signs shall be accurately depicted on drawings which designate the height, width, depth, colors, materials, message, lighting, and exact location of the proposed signs or sign alterations.

b. A site plan shall be required of any improvements deemed to be of such significance by the Director of Community Development that an actualan plan will be necessary to conduct a thorough review of the proposal. Site plans may be required for outdoor improvements and for additions to existing buildings or new buildings, but shall not be required for exterior material or appearance changes to existing buildings. In the latter situation, elevations shall be submitted in such detail that the Design Advisory Board could fully envision the completed alteration, with the full knowledge of colors, materials, window sizes, etc.

c. When a site plan is required, the following minimum information is required to be depicted:

1. All lot lines, minimum yard area lines, lines of existing streets and rights-of-way.

2. All existing or proposed improvements on the lot including, but not limited to, buildings, structures, parking areas, curbs, sidewalks, lighting devices and landscaped areas.

3. The building's front, side and rear elevations and typical floor plans in the case of new buildings or additions to existing buildings.

d. The fee for review shall be in an amount as established from time to time by resolution of the Township Board of Supervisors.

§225-403401.1.M. Southern Core, Overlay 13

1. Applicants proposing development on lots or the portions of lots thereof within the designated Southern Core Overlay shall be permitted to apply for land uses as designated with an "O" on the Zoning Ordinance Land Use Table, in the applicable base zoning district.

2. Parking areas and other automobile use areas shall be located to the rear of the building or shall be screened from the public street with a Class 3 or Class 4 landscape screen to distinguish areas of parking and the public realm from one another and reinforce areas of pedestrian and vehicular safety.

3. Site lighting levels shall be limited to the minimum Township standards to provide safety.

§225-403401.2. Environmental Overlays.

§225-403401.2.1. Sensitive Environmental Resources

A. Sensitive environmental areas are generally shown on Map 3, and shall consist of the following areas:

1. Land areas having slopes in excess of 20% which are not the result of man-made changes to the natural terrain.

2. Wetlands.

3. Areas of quarries, streams, lakes, dams or ponds and all areas within 50 feet of such features.

4. Cemeteries and all areas within 50 feet of a cemetery.

5. Landfills and areas within 50 feet of landfills.

B. Sensitive environmental areas shall not be physically disturbed or used for any use other than agricultural uses, conservation areas and uses for the conservation of open space, water, soil and wildlife resources, except as may be necessary to provide ingress, egress and regress to a property or to enable utility placement.

C. This section shall not be construed to further restrict any development activity currently permitted in §225-304 relating to the use of floodway, floodway fringe or approximated floodplains.

D. The subdivision of land after the effective date of this Chapter which contains such sensitive environmental areas as lakes, ponds, dams, quarries, cemeteries and landfills which, in the opinion of the Zoning Officer, are likely to require periodic maintenance, repair or protection, shall not occur unless the applicant demonstrates to the satisfaction of the Township Board of Supervisors a program which will be implemented to insure the perpetual maintenance, repair and/or protection of such sensitive environmental areas. The Township Board of Supervisors may condition the approval of such a subdivision upon the implementation of the perpetual maintenance, repair and/or protection program.[BW3]

§225-403401.2.2. Floodplain Overlay. The intent of these regulations is to promote the general health, welfare, and safety of the community; encourage the utilization of appropriate construction practices in order to prevent or minimize flood damage in the future; minimize danger to public health and safety by protecting water supply, sanitary sewage facilities, and natural drainage; reduce financial burdens imposed on the community, its governmental units, and its residents by preventing the unwise design and construction of development in areas subject to flooding; and comply with federal and state floodplain management requirements. The following requirements shall apply:

§225-401.2.2. Floodplain Overlay.

§225-403401.2.2.A. General Provisions.

A. The Legislature of the Commonwealth of Pennsylvania has, by the passage of the Pennsylvania Flood Plain Management Act of 1978, delegated the responsibility to local governmental units to adopt floodplain management regulations to promote public health, safety, and the general welfare of its citizenry. Therefore, the Township Board of Supervisors of the Township of Derry does hereby order as follows.

B. It shall be unlawful for any person, partnership, business, or corporation to undertake, or cause to be undertaken, any construction or development anywhere within the Township of Derry unless a permit has been obtained from the Floodplain Administrator.

C. Any new construction, development, uses, or activities allowed within any identified floodplain area shall be undertaken in strict compliance with the provisions contained in this Chapter and any other applicable codes, ordinances, and regulations.

D. Effect on existing ordinances. This article shall act as a supplement to the existing Building Code, Chapter **185**, Subdivision and Land Development, and this Chapter with respect to any property located in the Floodplain Overlay of the Township of Derry, as hereinafter defined. To the extent that these regulations are more restrictive, they shall supersede the Building Code, Chapter **185**, Subdivision and Land Development, and other provisions of this Chapter. To the extent that these regulations are less restrictive, they shall not supersede the more restrictive provisions of the Building Code, Chapter **185**, Subdivision and Land Development, and other provisions of this Chapter.

E. If any section, subsection, paragraph, sentence, clause, or phrase of this Chapter shall be declared invalid for any reason whatsoever, such a decision shall not affect the remaining portions of the Chapter which shall remain in full force and effect, and for this purpose the provisions of this Chapter are hereby declared to be severable.

§225-403401.2.2.B. Establishment of District.

A. The Floodplain Overlay (aka the identified floodplain area) shall be any areas of the Township of Derry, classified as special flood hazard areas (SFHAs) in the Flood Insurance Study (FIS) and the accompanying Flood Insurance Rate Maps (FIRMs) dated August 2, 2012, and issued by the Federal Emergency Management Agency (FEMA), or the most recent revision thereof, including all digital data developed as part of the Flood Insurance Study. The referenced FIS and FIRMs, and any subsequent revisions and amendments, are hereby adopted by the Township of Derry and declared to be a part of this Chapter.

B. The Floodplain Overlay shall be comprised of four subdistricts, as follows:

1. Floodway.

a. Description. That portion of the Floodplain Overlay identified as Floodway in the FIS which represents the channel of a watercourse and the adjacent land areas that must be reserved in order to discharge the base flood without cumulatively increasing the water surface elevation by more than one foot at any point. This term shall also include floodway areas which have been identified in other available studies or sources of information for those special floodplain areas where no floodway has been identified in the FIS.

b. Special requirements:

(1) Any encroachment that would cause any increase in flood heights shall be prohibited.

(2) No new construction or development shall be allowed, unless a permit is obtained from the Department of Environmental Protection Regional Office.

2. Special Floodplain.

a. Description. That portion of the Floodplain Overlay identified as Zones AE and A1-30 in the FIS which are subject to inundation by the one-percent annual chance flood event determined by detailed methods and have base flood elevations (BFEs) shown.

b. Special requirements:

(1) No new construction or development shall be located within the area measured 50 feet landward from the top-of-bank of any watercourse, unless a permit is obtained from the Department of Environmental Protection Regional Office.

(2) In Special Floodplain areas without a designated floodway, no new development shall be permitted unless it can be demonstrated that the cumulative effect of all past and projected development will not increase the base flood elevation.

3. Approximate Floodplain.

a. Description. That portion of the Floodplain Overlay identified as Zone A in the FIS which is subject to inundation by the one-percent annual chance flood event determined using approximate methodologies. Because detailed hydraulic analyses have not been performed, no BFEs or flood depths are shown.

b. Special requirements:

(1) No new construction or development shall be located within the area measured 50 feet landward from the top-of-bank of any watercourse, unless a permit is obtained from the Department of Environmental Protection Regional Office.

(2) When available, information from other federal, state, and other acceptable sources shall be used to determine the base flood elevation, as well as a floodway area, if possible. When no other information is available, the base flood elevation shall be determined by using a point on the boundary of the identified floodplain area which is nearest the construction site in question.

(3) The Township may require that the applicant determine the one-percent annual chance flood elevation with hydrologic and hydraulic engineering techniques. Hydrologic and hydraulic analyses shall be undertaken only by professional engineers or others of demonstrated qualifications, who shall certify that the methods used correctly reflect currently accepted technical concepts. Studies, analyses, computations, etc., shall be submitted in sufficient detail to allow a thorough technical review by the Township.

4. Shallow Flooding.

a. Description. That portion of the Floodplain Overlay identified as Zones AO and AH in the FIS. These areas are subject to inundation by the one-percent annual chance

shallow flooding, where average depths are between one and three feet. This subdistrict is not presently mapped in the Township of Derry.

b. Special requirements. Establish drainage paths to guide floodwaters around and away from structures on slopes.

C. Changes in identification of area. The identified Floodplain Overlay may be revised or modified by the Township of Derry where studies or information provided by a qualified agency or person documents the need for such revision. However, prior to any such change, approval must be obtained from FEMA. Additionally, as soon as practicable, but not later than six months after the date such information becomes available, a community shall notify FEMA of the changes by submitting technical or scientific data.

D. Boundary dispute. Should a dispute concerning any district boundary arise, an initial determination shall be made by the Zoning Officer. Any party aggrieved by this decision may appeal to the Township Zoning Hearing Board. The burden of proof shall be on the appellant.

§225-403401.2.2.C. Utilization of District.

A. In accordance with the administrative regulations promulgated by the Department of Community and Economic Development to implement the Pennsylvania Flood Plain Management Act, the following activities shall be prohibited within the Floodplain Overlay. This shall include the commencement of any of the following activities, or the construction, enlargement, or expansion of any structure used, or intended to be used, for any of the following activities:

1. Wild, domestic, or farm animal enclosures which will not allow all animals to escape floodwaters without human intervention.

2. Hospitals.

3. Skilled nursing homes.

4. Jails or prisons.

5. Life care facilities.

6. Congregate care homes.

7. Cemeteries.

8. Group child-care facilities.

9. Family child-care homes.

10. The commencement of, or any construction of, a new manufactured home park or manufactured home subdivision, or substantial improvement to an existing manufactured home park or manufactured home subdivision.

11. Any use not permitted in the underlying zoning district.

B. General requirements. Except those uses prohibited in Subsection A, development and/or uses of land shall be permitted, which are permitted in the underlying zoning district regulations, only when the effect of such development on the base flood elevation is fully offset by accompanying stream or floodplain improvements which have been approved by all appropriate local and/or state authorities. Where a developer proposes to offset the effects of

development in the floodplain by construction of stream or floodplain improvements, he shall submit an engineering study prepared by a registered professional engineer which fully evaluates the effects of such construction. The report shall use the base flood elevation as herein defined as the basis of analysis. All adjacent communities and the state coordinating office shall be notified by the developer, by certified mail, of all such intended activities prior to any alteration or relocation of a stream or floodplain, and the developer shall submit copies of such notification to FEMA. In addition, the developer shall assure the Township of Derry, in writing, and shall document his findings with the relevant calculations, that the flood-carrying capacity within the altered or relocated portion of the stream or floodplain in question will be maintained with no change in the base flood elevation. All uses, activities, and other development shall be undertaken in strict compliance with the flood-proofing and related provisions contained herein, and with all other applicable codes, ordinances, and regulations. The owner or operator of any existing manufactured home park or manufactured home subdivision within the Floodplain Overlay shall file with the disaster preparedness authorities of Dauphin County and the Township of Derry an evacuation plan which includes alternative vehicular access routes and escape routes.

C. Existing structures and uses in the Floodplain Overlay. The provisions of this Chapter do not require any changes or improvements to be made to lawfully existing structures. However, when an improvement is made to any existing structure, the following provisions shall apply:

1. No expansion or enlargement of any existing structure and/or land use shall be allowed within the Floodway Subdistrict that would cause any increase in the elevation of the base flood elevation.

2. An existing structure and/or land use located in the Special Floodplain Subdistrict shall not be expanded or enlarged unless the effect of the proposed expansion or enlargement on flood heights is fully offset by accompanying stream or floodplain improvements. The documentation and procedures outlined in Subsection **B** shall also be applicable to the enlargement or expansion of an existing structure and/or land use. The maximum size of the enlargement or expansion of the structure and/or land use shall be limited to 25% of the area of the structure and/or land use and shall be limited to lot limits in effect at the time of adoption of this Chapter.

3. The modification, expansion, alteration, repair, reconstruction, or improvement of any kind to a structure and/or land use located in the Special Floodplain Subdistrict, to an extent or amount of 50% or more of its market value, shall constitute a substantial improvement and shall be undertaken only in full compliance with the provisions of this Chapter.

4. The modification, expansion, alteration, repair, reconstruction, or improvement of any kind to a structure and/or land use located in the Special Floodplain Subdistrict, to an extent or amount less than 50% of its market value, shall be elevated or floodproofed to the greatest extent possible.

§225-~~403~~401.2.2.D. Development Which May Endanger Human Life.

A. The provisions of this section shall be applicable, in addition to any other applicable provisions of this Chapter or any other ordinance, code, or regulation.

B. In accordance with the Pennsylvania Flood Plain Management Act, and the regulations adopted by the Department of Community and Economic Development as required by the Act, any new or substantially improved structure or land use which will be used for the production or storage of any of the following materials or substances; or which will be used for any activity requiring the maintenance of a supply of more than 550 gallons or other comparable volume of any of the following materials or substances on the premises; or which

will involve the production, storage, or use of any amount of radioactive substances shall be subject to the provisions of this section, in addition to all other applicable provisions. The following list of materials and substances are considered dangerous to human life:

1. Acetone.
2. Ammonia.
3. Benzene.
4. Calcium carbide.
5. Carbon disulfide.
6. Celluloid.
7. Chlorine.
8. Hydrochloric acid.
9. Hydrocyanic acid.
10. Magnesium.
11. Nitric acid and oxides of nitrogen.
12. Petroleum products (gasoline, fuel oil, etc.).
13. Phosphorus.
14. Potassium.
15. Sodium.
16. Sulphur and sulphur products.
17. Pesticides (including insecticides, fungicides, and rodenticides).
18. Radioactive substances, insofar as such substances are not otherwise regulated.

C. Within any Floodway Subdistrict or within an area measured 50 feet landward from the top-of-bank of any watercourse in the Floodplain Overlay, any structure or land use of the kind described in Subsection B shall be prohibited.

D. Within any Special Floodplain Subdistrict or Approximate Floodplain Subdistrict, any new or substantially improved structure or land use of the kind described in Subsection B shall comply with the following:

1. The structure or land use shall be elevated or designed and constructed to remain completely dry up to at least 1 1/2 feet above the base flood elevation.
2. The structure or land use shall be designed to prevent pollution from the structure or activity during the course of a base flood elevation.

3. Any structure, or part thereof, that will be built below the regulatory flood elevation shall be designed and constructed in accordance with the standards for completely dry floodproofing contained in the publication "Flood-Proofing Regulations" (U.S. Army Corps of Engineers, June 1972, as amended March 1992) or with an equivalent watertight standard.

E. Except for a possible modification of the freeboard requirements involved, no variance shall be granted for any of the other requirements of this section.

§225-403401.2.2.E. Design and Construction Standards.

In order to prevent damage to buildings and structures, the following restrictions shall apply to all new construction and to construction of substantial improvements to existing structures occurring in the Floodplain Overlay:

A. Special requirements for subdivisions. All subdivision proposals and development proposals containing at least 50 lots or at least five acres, whichever is the lesser, in flood hazard areas where base flood elevation data are not available shall be supported by hydrologic and hydraulic engineering analyses that determine base flood elevations and floodway information. The analyses shall be prepared by a licensed professional engineer in a format required by FEMA for a Conditional Letter of Map Revision or Letter of Map Revisions. Submittal requirements and processing fees shall be the responsibility of the applicant.

B. Special requirements for manufactured homes.

1. Manufactured homes shall be prohibited within the Floodway Subdistrict.

2. Manufactured homes shall be prohibited within the area measured 50 feet landward from the top-of-bank of any watercourse within the Special Floodplain Subdistrict or Approximate Floodplain Subdistrict.

3. Where permitted within the Special Floodplain Subdistrict or Approximate Floodplain Subdistrict, all manufactured homes, and any improvements thereto, shall be:

a. Placed on a permanent foundation.

b. Elevated so that the lowest floor of the manufactured home is at least 1 1/2 feet above base flood elevation.

c. Anchored to resist flotation, collapse, or lateral movement.

4. Installation of manufactured homes shall be done in accordance with the manufacturer's installation instructions as provided by the manufacturer. Where the applicant cannot provide the above information, the requirements of Appendix E of the 2009 International Residential Building Code, or the most recent revisions thereto, or the U.S. Department of Housing and Urban Development's Permanent Foundations for Manufactured Housing, 1984 Edition, draft, or latest revision thereto, and 34 Pa Code §§ 401402 through 405, as amended, shall apply.

5. Consideration shall be given to the installation requirements of the 2009 IBC, and the 2009 IRC or the most recent revisions thereto and 34 Pa Code, as amended, where appropriate and/or applicable to units where the manufacturers' standards for anchoring cannot be provided or were not established for the units(s) proposed installation.

C. Special requirements for recreational vehicles.

1. Recreational vehicles in Zones A, A1-30, AH, and AE must either:

   a. Be on the site for fewer than 180 consecutive days;

   b. Be fully licensed and ready for highway use: or

   c. Meet the permit requirements for manufactured homes listed in §225**-304.5.B**.

D. Residential structures.

1. In Zones AE, A1-30, and AH, any new construction or substantial improvement shall have the lowest floor (including basement) elevated up to, or above, the regulatory flood elevation.

2. In Zone A, where no base flood elevations are specified on the FIRM, any new construction or substantial improvement shall have the lowest floor (including basement) elevated up to, or above, the regulatory flood elevation in accordance with §225**-304.2.B(3)(b)[2]** of this Chapter.

3. In Zone AO, any new construction or substantial improvement shall have the lowest floor (including basement) at or above the highest adjacent grade, at least as high as the depth number specified on the FIRM.

4. The design and construction standards and specifications contained in the 2009 International Building Code (IBC) and in the 2009 International Residential Code (IRC) or the most recent adopted revisions thereof, and ASCE 24 and 34 Pa Code §§ 401402 through 405, as amended, shall be utilized.

E. Nonresidential structures.

1. In Zones AE, A1-30, and AH, any new construction or substantial improvement of a nonresidential structure shall have the lowest floor (including basement) elevated up to, or above, the regulatory flood elevation, or be designed and constructed so that the space enclosed below the regulatory flood elevation:

   a. Is floodproofed so that the structure is watertight with walls substantially impermeable to the passage of water; and

   b. Has structural components with the capability of resisting hydrostatic and hydrodynamic loads and effects of buoyancy.

2. In Zone A, where no base flood elevations are specified on the FIRM, any new construction or substantial improvement shall have the lowest floor (including basement) elevated or completely floodproofed up to, or above, the regulatory flood elevation in accordance with §225-304.2.B(3)(b)[2] of this Chapter.

3. In Zone AO, any new construction or substantial improvement shall have the lowest floor elevated or completely floodproofed above the highest adjacent grade, at least as high as the depth number specified on the FIRM.

4. Any nonresidential structure, or part thereof, made watertight below the regulatory flood elevation shall be floodproofed in accordance with the W1 or W2 space classification standards contained in the publication entitled "Flood-Proofing Regulations," published by the U.S. Army Corps of Engineers (June 1972, as amended March 1992), or with an equivalent standard. A statement certified by a registered professional engineer or architect which states that the proposed design and methods of construction are in

conformance with the above-referenced standards shall accompany all plans and specifications for such floodproofing.

5. The design and construction standards and specifications contained in the 2009 International Building Code (IBC) and in the 2009 International Residential Code (IRC), or the most recent adopted revisions thereof, and ASCE 24 and 34 Pa Code §§ 401402 through 405, as amended, shall be utilized.

F. Accessory structures. Structures accessory to a principal building need not be elevated or floodproofed to remain dry, but shall comply, at a minimum, with the following requirements:

1. The structure shall not be designed or used for human habitation, but shall be limited to the parking of vehicles, or to the storage of tools, material, and equipment related to the principal use or activity.

2. Floor area shall not exceed 100 square feet.

3. The structure shall have a low damage potential.

4. The structure shall be located on the site so as to cause the least obstruction to the flow of floodwaters.

5. Power lines, wiring, and outlets will be elevated to the regulatory flood elevation.

6. Permanently affixed utility equipment and appliances such as furnaces, heaters, washers, dryers, etc., are prohibited.

7. Portable sanitary facilities are prohibited.

8. The structure shall be adequately anchored to prevent flotation or movement and shall be designed to automatically provide for the entry and exit of floodwater for the purpose of equalizing hydrostatic forces on the walls. Designs for meeting this requirement must either be certified by a registered professional engineer or architect, or meet or exceed the following minimum criteria:

9. A minimum of two openings having a net total area of not less than one square inch for every square foot of enclosed space.

   a. The bottom of all openings shall be no higher than one foot above grade.

   b. Openings may be equipped with screens, louvers, etc., or other coverings or devices provided that they permit the automatic entry and exit of floodwaters.

G. Space below the lowest floor.

1. Fully enclosed space below the lowest floor (excluding basements) which will be used solely for the parking of a vehicle, building access, or incidental storage in an area other than a basement shall be designed and constructed to allow for the automatic entry and exit of floodwaters for the purpose of equalizing hydrostatic forces on exterior walls. The term "fully enclosed space" also includes crawl spaces.

2. Designs for meeting this requirement must either be certified by a registered professional engineer or architect, or meet or exceed the following minimum criteria:

   a. A minimum of two openings having a net total area of not less than one square inch for every square foot of enclosed space.

b. The bottom of all openings shall be no higher than one foot above grade.

c. Openings may be equipped with screens, louvers, etc., or other coverings or devices provided that they permit the automatic entry and exit of floodwaters.

H. Fill. If fill is used to raise the finished surface of the lowest floors to the regulatory flood elevation:

1. Fill shall extend beyond a structure, extending laterally 15 feet beyond the building line from all points.

2. Fill shall consist of soil or small rock materials only. Sanitary landfills shall not be permitted.

3. Fill material shall be compacted to provide the necessary stability and resistance to erosion, scouring, or settling.

4. Fill slopes shall be no steeper than one vertical to two horizontal (2:1), unless substantiating data justifying steeper slopes are submitted to and approved by the Township Engineer.

5. Fill shall be used only to the extent to which it does not adversely affect adjacent properties and does not decrease the floodwater-carrying capacity of the floodplain.

I. Placement of buildings and structures.

1. All buildings and structures shall be constructed and placed on the lot so as to offer the minimum obstruction to the flow of water and shall be designed to not obstruct the flow and height of floodwaters.

2. The following shall not be placed or caused to be placed in the designated Floodplain Overlay: fences, except two-wire fences; other matter which may impede, retard, or change the direction of the flow of water or that will catch or collect debris carried by such water, or that is placed where the natural flow of the stream or floodwaters would carry the same downstream to the damage or detriment of property in or adjacent to the floodplain, unless such other matter is anchored to prevent such movement.

J. Anchoring.

1. All buildings and structures shall be firmly anchored in accordance with accepted engineering practices to prevent flotation, collapse, and lateral movement, thus reducing the threat to life and property and decreasing the possibility of the blockage of bridge openings and other restricted sections of the watercourse.

2. All air ducts, large pipes, storage tanks, and other similar objects or components located at or below the regulatory flood elevation shall be securely anchored or affixed to prevent flotation.

K. Floors, walls, and ceilings.

1. Wood flooring used at or below the regulatory flood elevation shall be installed to accommodate a lateral expansion of the flooring, perpendicular to the flooring grain without causing structural damage to the building.

2. Plywood used at or below the regulatory flood elevation shall be of a marine or water-resistant variety.

3. Walls and ceilings at or below the regulatory flood elevation shall be designed and constructed of materials that are water-resistant and will withstand inundation.

4. Windows, doors, and other components at or below the regulatory flood elevation shall be made of metal or other water-resistant material.

L. Paints and adhesives.

1. Paints and other finishes used at or below the regulatory flood elevation shall be of a marine or water-resistant quality.

2. Adhesives used at or below the regulatory flood elevation shall be of a marine or water-resistant variety.

3. All wooden components (doors, trim, cabinets, etc.) used at or below the regulatory flood elevation shall be finished with marine or water-resistant paint or other finishing material.

M. Electrical components.

1. Electrical distribution panels shall be at least three feet above the base flood elevation.

2. Separate electrical circuits shall serve lower levels and shall be dropped from above.

N. Equipment. Water heaters, furnaces, air conditioners, and ventilating units and other electrical, mechanical, or utility equipment or apparatus shall not be located below the regulatory flood elevation.

O. Fuel supply systems. All gas and oil supply systems shall be designed to prevent the infiltration of floodwaters into the system and discharges from the system into floodwaters. Additional provisions shall be made for the drainage of these systems in the event that floodwater infiltration occurs.

P. Utilities.

1. All new or replacement water and sanitary sewer facilities and systems shall be located, designed, and constructed to minimize or eliminate flood damages and the infiltration of floodwaters.

2. Sanitary sewer facilities and systems shall be designed to prevent the discharge of untreated sewage into floodwaters.

3. No part of any on-site sewage system shall be located within the Floodplain Overlay except in strict compliance with all federal, state and local regulations for such systems. If any such system is permitted, it shall be located so as to avoid impairment to it, or contamination from it, during a flood.

4. The design and construction provisions of the UCC and FEMA No. 348, (Protecting Building Utilities from Flood Damages) and all federal, state, and local regulations for such systems, shall be utilized.

5. All other utilities such as gas lines, electrical, and telephone systems shall be located, elevated (where possible), and constructed to minimize the chance of impairment during a flood.

Q. Streets. The finished elevation of all new streets shall be no more than one foot below the regulatory flood elevation.

R. Storage. All materials that are buoyant, flammable, explosive, or in times of flooding could be injurious to human, animal, or plant life and not listed in §225-304.4, Development which may endanger human life, shall be stored at or above the regulatory flood elevation and/or floodproofed to the maximum extent possible.

S. Drainage. Storm drainage facilities shall be designed to convey the flow of stormwater runoff in a safe and efficient manner. The system shall insure proper drainage along streets and provide positive drainage away from buildings. The system shall be designed to prevent the discharge of excess runoff onto adjacent properties.

T. Alteration or relocation of watercourse.

1. No encroachment, alteration, or improvement of any kind shall be made to any watercourse until all adjacent municipalities which may be affected by such action have been notified by the municipality, and until all required permits or approvals have been first obtained from the Department of Environmental Protection Regional Office.

2. No encroachment, alteration, or improvement of any kind shall be made to any watercourse unless it can be shown that the activity will not reduce or impede the flood-carrying capacity of the watercourse in any way.

3. In addition, the FEMA and Pennsylvania Department of Community and Economic Development shall be notified by the developer prior to any alteration or relocation of any watercourse.

U. The developer shall submit technical or scientific data to FEMA for a Letter of Map Revision (LOMR) within six months of the completion of any new construction, development, or other activity resulting in changes in the base flood elevation.

V. Uniform Construction Code coordination.

1. The standards and specifications contained 34 Pa Code §§ 401402 through 405, as amended, and not limited to the following provisions, shall apply to the extent that they are more restrictive and/or supplement the requirements of this subsection.

a. International Building Code (IBC) 2009, or the latest edition thereof: Secs. 801, 1202, 1403401, 1603, 1605, 1612, 3402, and Appendix G.

b. International Residential Building Code (IRC) 2009, or the latest edition thereof: Sees. R104, R105, R109, R323, Appendix AE101, Appendix E, and Appendix J.

§225-403401.2.2.F. Criteria for Permits.

A. A permit shall be required before any construction or development is undertaken within any area of the Township Floodplain Overlay. The Floodplain Administrator shall have the following duties related to permits in the Floodplain Overlay.

1. The Floodplain Administrator shall issue a permit only after it has been determined that the proposed work to be undertaken will be in conformance with the requirements of this Chapter and all other applicable codes and ordinances.

2. Prior to the issuance of any permit, the applicant shall demonstrate to the Floodplain Administrator that all other necessary government permits required by state and federal laws have been obtained, such as those required by the Pennsylvania Sewage Facilities Act (Act 1966-537, as amended); the Pennsylvania Dam Safety and Encroachments Act (Act 1978-325, as amended); the Pennsylvania Clean Streams Act (Act 1937-394, as

amended); and the U.S. Clean Water Act, Section 404, 33 U.S.C. § 1344. No permit shall be issued until this determination has been made.

3. During the construction period, the Floodplain Administrator or other authorized official shall inspect the premises to determine that the work is progressing in compliance with the information provided on the permit application and with all applicable municipal laws and ordinances. The Floodplain Administrator or other authorized official shall make as many inspections during and upon completion of the work as are necessary.

4. In the discharge of his or her duties, the Floodplain Administrator shall have the authority to enter any building, structure, premises, or development in the Floodplain Overlay, upon presentation of proper credentials, at any reasonable hour to enforce the provisions of this Chapter.

5. In the event the Floodplain Administrator discovers that the work does not comply with the permit application or any applicable laws and ordinances, or that there has been a false statement or misrepresentation by any applicant, the Floodplain Administrator shall revoke the permit and may take enforcement action as permitted by this Chapter.

6. The Floodplain Administrator shall maintain all records associated with the requirements of this Chapter, including, but not limited to, permitting, inspection, and enforcement.

7. The Floodplain Administrator shall consider the requirements of 34 Pa Code and the 2009 IBC and the 2009 IRC, or latest revisions thereof.

B. Application for such a permit shall be made, in writing, to the Floodplain Administrator on forms supplied by the Township of Derry. Such application shall contain the following:

1. Name, address, telephone number, and e-mail address of applicant.

2. Name, address, telephone number, and e-mail address of owner of land on which proposed construction is to occur.

3. Name, address, telephone number, and e-mail address of contractor.

4. Site location, including address.

5. Listing of other permits required.

6. Brief description of proposed work and estimated cost, including a breakout of flood-related cost and the market value of the building before the flood damage occurred, where appropriate.

7. A plan of the site showing the exact size and location of the proposed construction as well as any existing buildings or structures.

C. Where any proposed construction or development is located partially or entirely within the Floodplain Overlay, the applicant shall file the following minimum information plus any other pertinent information as may be required by the Floodplain Administrator:

1. A completed permit application form.

2. A plan of the entire site, clearly and legibly drawn at a scale of one inch being equal to 50 feet or less, showing the following:

a. North arrow, scale, and date.

b. Topographic contour lines, if available.

c. The location of all existing and proposed buildings, structures, and other improvements, including the location of any existing or proposed subdivision and development.

d. The location of all existing streets, drives, and other accessways.

e. The location of any existing bodies of water or watercourses; identified floodplain areas; if available, information pertaining to the floodway; and the flow of water, including direction and velocities.

3. Plans of all proposed buildings, structures, and other improvements, drawn at a suitable scale, showing the following:

a. The proposed lowest floor elevation of any proposed building based upon North American Vertical Datum of 1988.

b. The elevation of the base flood.

c. Supplemental information as may be necessary under 34 Pa Code, the 2009 IBC, or the 2009 IRC.

4. The following data and documentation:

a. Where applicable, information concerning flood depths, pressures, velocities, impact, and uplift forces and other factors associated with a base flood elevation.

b. Detailed information concerning any proposed floodproofing measures and corresponding elevations.

c. Documentation, certified by a registered professional engineer or architect, to show that the cumulative effect of any proposed development within a Special Floodplain Subdistrict as defined herein, when combined with all other existing and anticipated development, will not increase the base flood elevation.

d. A document, certified by a registered professional engineer or architect, which states that the proposed construction or development has been adequately designed to withstand the pressures, velocities, impact, and uplift forces associated with the base flood elevation. Such statement shall include a description of the type and extent of floodproofing measures which have been incorporated into the design of the structure and/or the development.

e. Detailed information needed to determine compliance with §225**-304.4**, Development which may endanger human life, and §225**-304.5.R**, Storage, including:

(1) The amount, location, and purpose of any materials or substances referred to in §225**-304.4** and §225**-304.5.R** and which are intended to be used, produced, stored, or otherwise maintained on site.

(2) A description of the safeguards incorporated into the design of the proposed structure to prevent leaks or spills of the dangerous materials or substances listed in §225**-304.4** during a base flood.

f. When appropriate, the correct component of the Department of Environmental Protection's "Planning Module for Land Development."

g. Where any excavation or grading is proposed, a plan meeting the requirements of the Department of Environmental Protection to implement and maintain erosion and sedimentation control.

5. All the necessary information shall be provided in sufficient detail and clarity to enable the Floodplain Administrator to determine that:

   a. All such proposals are consistent with the need to minimize flood damage and conform with the requirements of this Chapter and all other applicable codes and ordinances.

   b. All utilities and facilities, such as sewer, gas, electrical, and water systems are located and constructed to minimize or eliminate flood damage.

   c. Adequate drainage is provided so as to reduce exposure to flood hazards.

   d. Structures will be anchored to prevent flotation, collapse, or lateral movement.

   e. Building materials are flood-resistant.

   f. Appropriate practices that minimize flood damage have been used.

   g. Electrical, heating, ventilation, plumbing, air-conditioning equipment, and other service facilities have been designed and/or located to prevent water entry or accumulation.

6. No permit shall be issued until the fees, in amounts as established from time to time by resolution of the Township Board of Supervisors, have been paid to the Township. The payment of fees described in this section shall not relieve the applicant or holder of said permit from payment of other fees that may be required by this Chapter or any other regulation, including any fees for special consulting services required in the issuance of a permit as may be required by §225-304.6.D.

   a. The permit shall be a license to proceed with the work and should not be construed as authority to violate, cancel, or set aside any of the provisions of this Chapter.

   b. All work or uses shall conform to the approved application and plans for which the permit has been issued, as well as the approved plot plan.

D. Review of application by others. The Floodplain Administrator may submit a copy of all plans and applications to be considered for approval for any proposed construction or development in the Floodplain Overlay to any other appropriate agencies and/or individuals (e.g., Township Planning Commission, municipal engineer, etc.) for review and comment.

E. Placards. In addition to the permit, the Floodplain Administrator shall issue a placard which shall be displayed on the premises during the time construction is in progress. This placard shall show the number of the permit, the date of its issuance, and shall be signed by the Floodplain Administrator or their agent.

F. Changes. After the issuance of a permit by the Floodplain Administrator, no changes of any kind shall be made to the application, permit, or any of the plans, specifications, or other documents submitted with the application without the written consent or approval of the Floodplain Administrator. Requests for any such change shall be in writing, and shall be submitted by the applicant to the Floodplain Administrator for consideration of a permit amendment.

G. Start of construction. Work on the proposed construction and/or development shall begin within 180 days after the date of permit issuance and shall be completed within 12 months after the date of issuance of the permit; or the permit shall expire unless a time extension is granted, in writing, by the Floodplain Administrator. Construction and/or development shall be considered to have started with the preparation of land; land clearing; grading; filling; excavation of basement, footings, piers, or foundations; erection of temporary forms; the installation of piling under proposed subsurface footings; or the installation of sewer, gas, and water pipes; or electrical or other service lines from the street. Time extensions shall be granted only if a written request is submitted by the applicant, which sets forth sufficient and reasonable cause for the Floodplain Administrator to approve such a request.

§225-403401.2.2.G. Appeals and Variances.

A. If compliance with any of the requirements of this Chapter would result in an exceptional hardship to a prospective builder, developer, or landowner and/or if any person aggrieved by any action or decision of the Floodplain Administrator concerning the administration of the provisions of this Chapter, those persons may appeal to the Township Zoning Hearing Board. The following findings shall be made prior to the granting of a variance, in addition to those specified in §225**-1007.9**:

1. No variance shall be granted for any construction, development, use, or activity within the Floodway Subdistrict that would cause any increase in the base flood elevation.

2. No variance shall be granted for any construction, development, use, or activity within the Special Floodplain Subdistrict or the Approximate Floodplain Subdistrict that would, together with all other existing and anticipated development, increase the base flood elevation.

3. No variance shall be granted for any of the other requirements pertaining specifically to development regulated by §225**-304.4**, Development which may endanger human life, except for a possible modification of the regulatory flood elevation requirement involved.

4. That a showing of good and sufficient cause has been demonstrated.

5. That a determination is made that failure to grant the variance would result in exceptional hardship to the applicant.

6. That a determination is made that the granting of a variance will not result in unacceptable or prohibited increase in flood heights, additional threats to public safety, extraordinary public expense, the creation of nuisances; and will not cause fraud on or victimize the public or conflict with any other applicable local laws or ordinances, other than the issue from which the variance is sought.

7. That a determination is made that the granting of a variance will not jeopardize the Township of Derry's participation in the National Flood Insurance Program.

8. That a determination is made that the variance is the least modification necessary, considering the flood hazard, to provide relief.

B. In granting any variance, the Township Zoning Hearing Board shall attach whatever reasonable conditions and safeguards it considers necessary in order to protect the public health, safety, and welfare, and to achieve the objectives of this Chapter.

C. Whenever a variance is granted, the Township Zoning Hearing Board shall notify the applicant, in writing, that:

1. Granting of the variance may result in increased premium rates for flood insurance; and

2. Such variances may increase risks to life and property.

D. Any person aggrieved by any decision of the Township Zoning Hearing Board may seek relief by appeal to court, as provided by the laws of this state, including the Pennsylvania Flood Plain Management Act.

E. The Township Zoning Hearing Board shall:

1. Maintain a record of all variance requests and actions, including justification for granted variances.

2. Report such decisions, issued in an annual report and submitted to the Federal Insurance Administrator.

3. Provide a report of all variances granted during the year in an annual report to FEMA.

F. Notwithstanding any of the above, however, all structures shall be designed and constructed so as to have the capability of resisting a one-percent annual chance flood.

§ 225-403401.2.2.H. Warning and Disclaimer of Municipal Liability.

A. The degree of flood protection sought by the provisions of this Chapter is considered reasonable for regulatory purposes and is based on acceptable engineering methods of study. Larger floods may occur or flood heights may be increased by man-made or natural causes, such as ice jams and bridge openings restricted by debris. This Chapter does not imply that areas outside the Floodplain Overlay, or that land uses permitted within such district, will be free from flooding or flood damages.

B. The granting of a permit or approval of a subdivision or land development plan shall not constitute a representation, guarantee, or warranty of any kind by the Township of Derry or by any official or employee thereof of the practicability or safety of the proposed use and shall create no liability upon the Township of Derry, its officials, or employees.

C. This Chapter shall not create liability upon the Township of Derry, its officials, officers, or employees for any flood damages that result from reliance on this Chapter, or any administrative decision lawfully made thereunder.

§ 225-403401.3. Airport Safety Zone Overlay.

The purpose of the Overlay is to address the Pennsylvania State Aviation Code and Federal Aviation Regulation No. 77 requiring the limitation of building and structural height in "airport hazard areas." Areas contained within Derry Township the Township have been identified as being within the "airport hazard area" for the Reigle Airport, located in South Londonderry Township, Lebanon County, as defined in the Pennsylvania Aviation Code, and require special height controls. These height restrictions are designed to prevent any encroaching that would interfere with, or obstruct, normal airplane approaches or airport operations. Such interference or obstruction would pose a threat to the health, safety, welfare and convenience to residents of the Township, as well as passengers aboard airport aircraft. The airport safety zone is used to impose needed height restrictions as a zoning overlay, thereby enhancing public safety.

A. A Relationship to Other Activities.

The Airport Safety Zone Overlay is a zoning district that only regulates height. The underlying zoning district shall prescribe all other zoning-related standards and uses which shall be imposed upon any lands within the Township. In those instances where the Airport Safety

Overlay prescribes a maximum height restriction more restrictive than specified elsewhere in this Chapter, the most restrictive standard shall apply.

B. B Maximum Height Permitted.

No change to any building, structure, natural growth or topography shall occur which would cause or allow any building, structure, natural growth or any other topographical feature, including the land surface, to exist at an elevation equal to or in excess of 637 feet above sea level.

C. C Establishment of Airport Planning Agency.

The Derry Township Planning Commission is hereby appointed as the Airport Planning Agency, and shall hereinafter be empowered to perform duties in accordance with Title 74, Part III, § 5914(b), of the Pennsylvania Consolidated Statutes.

D. D Establishment of Board of Appeals.

The Derry Township Zoning Hearing Board is hereby appointed as the agency which is empowered to consider and grant variances, if deemed appropriate, from the restrictions set forth in this article.

E. E Variances.

1. Any person desiring to erect any structure or increase the height of any structure or topography, or permit the growth of any object of natural growth or otherwise use his property is violation of this article shall apply to the Township Zoning Hearing Board for a variance from the zoning regulations in question. A variance may be allowed where a literal application or enforcement of the regulations would result in practical difficulty or unnecessary hardship and the relief granted would not be contrary to the public interest but would do substantial justice and would be in accordance with the spirit of the regulations. Any variance may be granted subject to any reasonable conditions that the Board may deem necessary to effectuate the purposes of this article.

2. Hazard marking and lighting. In granting a variance under this section, the Township Zoning Hearing Board shall, if it deems the action advisable to effectuate the purpose of this article and reasonable in the circumstances, so condition the permit or variance as to require the owner of the land, structure or object of natural growth in question at his own expense, or require the person or persons requesting the variance to install, operate and maintain thereon such markers and lights as may be required by guidelines or regulations adopted by the Federal Aviation Administration of the United States Department of Transportation.

3. Notwithstanding any other provision of law, if the Township Zoning Hearing Board decides to grant a permit or variance under this article, it shall notify the Federal Aviation Administration of the United States Department of Transportation of its decision. This notice shall be in writing and shall be sent so as to reach the Department at least 10 days before the date upon which the decision is to be issued.

§225-403401.4. Reserved. Master Plan Approval Process for Overlay Development Approval Area.[BW4]

A. **The**[CWE5] **purpose of the Master Plan Development approval process is to encourage owners to unitize or assemble large parcels of land to create a coordinated and well-conceived development which otherwise may not be created on small parcels of land. The Master Plan is an optional mechanism that permits owners and the Township to promote and encourage ingenuity**

in the layout and design of coordinated projects to more effectively improve and enhance sensitive natural resources, open spaces, and existing infrastructure, etc. by allowing flexibility in the site layout from requirements in the underlying zoning district. This process is permitted by conditional use in the following Development Approval Area Overlays:

1. **This process is permitted by conditional use in the following Development Approval Area Overlays:**

a. **West - *Master Plan***

Specific application requirements respond to the unique natural and geographic conditions in the area as well as the scale and style of the development. Consistent with the PA Municipalities Planning Code Traditional Neighborhood Development provisions, the West - Master Plan Development approval area process includes submission of a Master Plan that addresses all applicable requirements of this Chapter.

b. **North - *Master Plan***

Specific application requirements respond to the planned campus area and unique natural and geographic conditions in the area as well as the scale of the development. Consistent with the PA Municipalities Planning Code Traditional Neighborhood Development provisions, the North – Master Plan Development approval area process includes submission of a Master Development Plan that addresses all applicable requirements of this Chapter.

c. **South - *Master Plan***

Specific application requirements respond to the planned school campus area, fiduciary responsibilities of the property owner, unique natural and geographic conditions in the area, existing development pattern, as well as the scale and style of the development. Consistent with the PA Municipalities Planning Code Traditional Neighborhood Development provisions, the

South - Master Plan Development approval area process includes submission of a Master Development Plan that addresses all applicable requirements of this Chapter.

d. Central - Master Plan

Specific application requirements respond to xxxxxxxx[CWE6].

2. Property Requirements for Master Plan Approval Process.

a. Site Requirements. Property subjected to Master Plan approval shall, at the time of first approval, meet the following site requirements:

i. Ownership. The entire site for the Master Plan shall:

a. Be owned or controlled (i.e. contract purchaser, ground lease, etc.) by the developer, or

b. The owners of all the land shall submit a document in recordable form and in a form approved by the Township Solicitor binding all owners to comply with the Master Plan approved by the Conditional Use approval.

ii. Minimum site. The site subject to the Master Plan shall not be less than 2 acres in the Hershey Mixed Use and Palmdale Mixed Use zoning districts and shall be not less than 10 acres in all other zoning districts.

iii. Frontage. The minimum frontage abutting on a public right-of-way shall not be less than one hundred fifty (150) feet.

iv. Access. The lot must provide for direct points of ingress and egress in a manner to assure convenient and safe access, which will not cause undue congestion or hazard on local roads.

v. Each lot shall, to the greatest extent possible, preserve sensitive environmental features, existing wooded areas and historical resources.

3. Approval of a Master Plan.

The Board of Supervisors shall approve or disapprove the Master Plan in accordance with the provisions of this Section as a conditional use. Prior to granting approval or denying a conditional use application, the proposal shall first be reviewed by the Derry Township Planning Commission and may be reviewed by the Dauphin County Planning Commission. Furthermore, a minimum of one public hearing shall be held by the Board of Supervisors pursuant to public notice within 60 days of the applicant's request for a hearing.

4. Master Plan Application and Requirements.

a. Applicants seeking Master Plan approval are encouraged to contact the Department of Community Development to discuss their project prior to formal submission. It is also advisable to present a draft of the master plan to staff, the Township Planning Commission and the Board of Supervisors for informal discussions.

b. The submission for Master Plan approval shall include an application, a location map, site plan, proposed development plan and any required engineering reports that are deemed necessary by the Township to determine compliance with applicable Sections of the Township

Code. The application shall be submitted to the Township and shall be accompanied by a fee as may be set forth from time to time by resolution of the Board of Supervisors.

c. Such plans and other materials shall not be required to meet the standards prescribed for preliminary or final land development approval or for the issuance of a building permit so long as they provide reasonable detail of the proposed use or development and a sufficient basis for a determination as to its compliance with these regulations. The maps plans and other documents shall be provided in the same number as comparable documents required for subdivision and/or land development under Chapter 185, Subdivision and Land Development.

d. Incomplete application. The Director of Community Development shall review the application for completeness in accordance with the requirements of this Chapter. If an application is found to be incomplete, the application shall be rejected; the Director of Community Development shall notify the applicant, in writing, citing the specific deficiencies and the specific requirements of this Chapter that have not been met.

e. Deficient application. If the Director of Community Development determines that the plans and application do not meet numerous and/or significant requirements of the Township's Ordinances, the Director of Community Development shall give the applicant an opportunity to withdraw the plan for correction and refiling, without an additional Township filing fee, unless an additional public notice is required, then the fee shall be equal to the cost of the notice.

f. Complete application. The Director of Community Development shall forward one (1) copy each of the complete Master Plan-application to the Planning Commission, the Township Engineer, the Derry Township Municipal Authority, the Dauphin County Planning Commission, and other such consultants, agencies and boards as is deemed necessary to provide a comprehensive review of the materials.

g. The site plans shall include the following:

i. Property Map. This map shall show the boundaries of all land subject to Master Plan approval with the names, deed reference, recorded plan reference, and tax map parcel of all owners. The Property Map shall also show the names, deed reference, recorded plan reference, and tax map parcel of all abutting land owners and any platting of adjoining land to the Master Plan property.

ii. Zoning Map. This map shall be at a minimum scale of one (1) inch equals two-hundred feet, depicting the zoning classification of all properties indicated on the property map.

iii. Topography Map. This map shall be at a minimum scale of one (1) inch equals one-hundred feet, depicting contours obtained from PAMAP LiDAR or other equivalent source at 2' intervals and

topography indicating all man-made improvements thereon, including but not limited to buildings existing on any properties thereon or within 100' of the perimeter of the subject property.

iv. Landscape Master Plan. This plan shall be at a minimum scale of one (1) inch equals one-hundred feet depicting all existing wooded areas, bufferyards, screening, open space plantings and other areas required or intended to be vegetative.

v. Wayfinding/Signage Master Plan. This plan shall include full color renderings which include all dimensions, height and material choice of all principal freestanding signage, as well as a site plan showing location of all freestanding signs.

vi. Soil Classification Map. This plan shall be at a minimum scale of one (1) inch equals one-hundred feet, identifying soils and listing limiting factors of applicable soils.

vii. An environmental performances standards analysis in accordance with_____.

viii. A preliminary geotechnical report to the extent environmentally sensitive land is to be disturbed.

ix. Traffic Impact Study. A traffic impact study meeting the requirements of Chapter 185, Subdivision and Land Development

h. The Master Plan shall consist of the following information:

i. Drawings at a scale no smaller than one (1) inch equals one hundred (100) feet and text needed to clearly show all of the following:

a. The name of the proposed development and names, phone number, email and addresses of the landowner, the developer and the persons who prepared the plan.

b. The proposed street pattern including the names, paving width and rights-of-way of all streets and the widths and locations of easements or areas to be dedicated.

c. The layout of lots, units, and/or parcels, where appropriate, including dimensions, lot areas, lot numbers and building lines.

d. Preliminary Grading Plan for the entire site.

e. The location, predicted use, height, bulk and square footage for every proposed structure within the Master Plan development area.

f. The location of all off-street parking spaces and the total number of spaces to be provided, in accordance with the requirements of §225-____ of this Chapter; provided however the applicant may propose shared parking in accordance with §225-401.4.B.

g. The location, size and kind of improvements proposed for all common open space and recreation facilities, together with proposed ownership and maintenance arrangements for such open space.

h. A Landscaping Plan in accordance with §_____.

i. A plan showing anticipated location and width of sidewalks, pedestrian walkways, crosswalks, and bicycle paths.

ii. The following text or graphic materials:

a. The substance of anticipated covenants, grants, easements, or other restrictions proposed.

b. The extent to which the proposed Master Plan varies from land use, setbacks, height, land disturbance, density, lot coverage and bufferyard requirements of this Chapter and other zoning and subdivision regulations otherwise applicable to the subject property in tabular form.

c. A tentative development schedule, where lot development is to be phased over a period of years, not to exceed seven (7) years, with an option for a 5 year extension thereof, from the date of Master Plan Approval, showing proposed times for the filing of land development applications for each lot or facility within the proposed Master Plan area.

d. A written narrative describing land characteristics, common facilities, utility service availability including fire flow requirements, existing covenants, setting forth the applicant's reason for filing a Master Plan and demonstrating how the Master Plan complies with the purpose of this Chapter. The narrative shall describe any deviation from the base zoning requirements and the reasons and advantages thereof. The narrative shall cite anticipated modifications of requirements of Chapter 185, Subdivision and Land Development, necessary for the design of the project. The narrative should address the major features of the Master Plan and may contain such non- land use information such as estimates of taxes to be paid to all local government units, estimates of municipal and school districts costs and a benefit analysis.

e. Illustrative building types, elevations, building siting, typical cross section and rendering of front elevations of proposed buildings, at a minimum scale of one-eighth (1/8) inch equals one (1) foot.

f. Preliminary Architectural and Design Standards. The architectural and design standards shall set forth the requirements for exterior building materials, windows, general site design and compatibility with abutting structures. The applicant shall set forth whether said requirements will be included in covenants running with the land and whether the applicant will retain design approval control.

5. Required Land Development Plan Approvals.

Following Master Plan approval, an application for approval of a final subdivision and/or land development shall be submitted for each lot or facility shown on the finally approved Master Plan. The Subdivision and/or Land Development Plan shall be submitted as a Final Plan pursuant to the procedural provisions of Chapter 185. In applying the procedural provisions of Chapter 185, the finally approved Master Plan shall be considered as, and have the standing of, a Preliminary Plan as cited therein.

a. The Master Plan Requirements design enabled by of this Section shall govern all setback, height, land limits of disturbance, density, lot coverage and bufferyard requirements of this Chapter.

b. In addition to the requirements of Chapter 185 for final plans, the final subdivision and/or land development application for a lot or facility in the Master Plan shall include the material as outlined in Section 225-403.4.A.4.G.ii.a. through f. inclusive. Additionally, the Applicant shall submit supplementary data, which shall include:

i. Any covenants, grants of easements or other restrictions to be imposed on the use of land and structures.

ii. Provision for the maintenance, ownership and operation of all landscaping and bufferyard areas, common open spaces, private driveways, storm water management facilities and common recreation facilities. The provisions shall be covenants running with the land and shall be in a form approved by the Township Solicitor. The Township shall be made a third party beneficiary and shall have the express right to enforce all terms relating to maintenance of any landscaping, bufferyard, common open space or recreation facilities.

6. Required Improvements.

The improvements required and the security to guarantee their installation shall be in accordance with Chapter 185 for each Master Planned lot or facility. In addition thereto, if any other improvements, such as traffic enhancements or utility service, shown on the Master Plan are not

to be installed as part of the development of the lot or facility applied for, the applicant shall submit reports showing what, if any, portion of the traffic, utility or other improvements are required to support or mitigate the impact of such lot or facility being approved. The applicant shall be responsible for final design approval and security to guarantee the installation of all such additional improvements related to the lot or facility for which they seek approval or, in lieu thereof, may complete all Master Plan improvements.

7. Master Plan uses and site requirements.

a. Uses. Only those uses permitted in the underlying zoning district(s), or as listed below, may be permitted in a Master Plan area. Uses proposed may include:

i. Uses by-right.

ii. Special exception uses.

iii. Conditional uses, excluding "other uses" and "similar uses" unless approved by the Board of Supervisors as part of the Master Plan approval process.

iv. Apartment uses which may be permitted above the first/ground floor of a building subject to the additional requirements of § _____.

b. Density Bonuses. For those applicants/owners that complete the Master Plan approval process, the permitted densities of the underlying base zoning district may be increased by ____%.

Impervious cover bonus to consider additional incentives that are applicable for commercial uses ???

c. Bulk and Area Requirements. Property subjected to Master Plan conditional use approval shall, at the time of first approval, meet the following Bulk and Area requirements:

i. Minimum Building Setback. The minimum setback requirements for the perimeter of a Master Planned Development shall comply with the minimum setback requirements of the underlying zoning district.

ii. Minimum Bufferyards. A minimum of Class 1 or Class 2 buffer yards, as specified in §225-402 shall be provided on all Master Plan boundaries, except where the boundary abuts land in the Hershey Mixed Use and/or Palmdale Mixed Use zoning districts, in which case, a minimum of

Class 5 or Class 6 buffer yards shall be provided. No buffer yard is required under this Section where a Master Plan boundary abuts a street.

iii. Height Regulations. The maximum height of a structure shall not exceed sixty-five (65) feet, nor shall it interfere with the Airport Safety Zone overlay, in accordance §_____.

d. Off Street Parking. Off street parking spaces shall comply with §225-401.5 of this Chapter; provided however the applicant may propose shared parking by agreement of the users in accordance with 225-401.4.B.

e. Common driveways.

i. Common driveways constructed to a minimum width of 24 feet shall be provided, with paving standards meeting the requirements for a Minor Street as required by Chapter 185, Subdivision and Land Development. Lots having frontage on a common driveway shall have their required lot width calculated at the right-of-way line of the common drive in the same method as if the common drive were a public street.

ii. Common driveways shall be owned in common by all property owners of the development and shall be part of the common open space; however, a 42-foot minimum right-of-way shall be established for each common driveway. Common driveways shall be centered on the street right-of-way.

iii. Common driveways shall connect only to a public street.

8. Master Plan open space.

a. Common open space is encouraged in a Master Plan. The common open space shall be so dedicated or otherwise preserved and maintained so as to always remain open and available for use by the occupants of the development area. The land and facilities to be used for common open space may be acceptable if either of the following conditions is met:

i. The land and facilities shall be dedicated to a public association or the Township, or an easement created for public use, with the accepting public body agreeing to operate and maintain the dedicated land and facilities for the originally intended use.

ii. The land and facilities shall be deeded to an organization representing the landowners of the development. The organization shall covenant to operate and maintain the land and facilities for their originally intended use. The organization shall not be dissolved nor shall it dispose of the common open space, by sale or otherwise, without first offering to dedicate the common open space to the public and guaranteeing to the Township's satisfaction that the maintenance of the common open space will continue. The Township is under no obligation to accept dedication of this common open space for public use.

b. Common open space maintenance.

i. The applicant may propose covenants containing substantially the same provisions as set forth in §_____; or

ii. The applicant shall establish maintenance and operation requirements common to all lots in the Master Plan area and provide for easements, covenants and restrictions in recordable form, which

will guarantee future maintenance and operation. Such covenants, easements, and restrictions shall be in a form and substance approved by the Township Solicitor

c. Bufferyard and common landscaping. The bufferyards and common landscaping shown on the approved Master Landscaping Plan shall be maintained in one or a combination of the following ways:

i. By the developer, if the lots or units are not sold, and/or

ii. By the landowner, if the lots or units are sold, and/or

iii. By a Homeowners Association or Condominium Owners Association required to manage common open space, if the same has been created, and/or

iv. By a similar such organization if there is no common open space.

9. Public improvements.

All streets, sidewalks, lighting and drainage facilities therewith shall be designed and constructed in accordance with this Chapter and with the requirements of Chapter 185, Subdivision and Land Development and Chapter 174, Stormwater Management and all other applicable standards, regulations and requirements.

10. Variances and Modifications.

a. When approving a land development plan within a Master Plan area on an individual lot as a land development plan, the Board of Supervisors, upon the request of an applicant, may approve special, reasonable modifications thereto as will not be contrary to the public interest. Where a special, reasonable modification is requested by an applicant, the procedure outlined by Article IX of Chapter 185, Subdivision and Land Development, for granting modifications shall be strictly adhered to and followed.

b. Any variances of the zoning requirements except as authorized in this Section, shall only be made by the Zoning Hearing Board as a variance, if requested by an applicant.

c. All those provisions of the Master Plan relating to the operation of the Master Plan property authorized to be enforced by the Township under this Section may be modified, removed or released by the Township, except grants or easements relating to the service or equipment of a public utility. To ensure the integrity of the subdivision and/or land development plan and to guarantee that modifications permitted in the Master Plan process do not adversely affect the public interest, the enforcement and modification of the provisions of the subdivision and or land development plan as finally approved, whether they are recorded by plat, covenant, easement or otherwise, are subject to the following conditions:

i. No such modification, removal or release of any provision of the Master Plan by the Township shall affect the rights of the owners or tenants of any Master Plan development to maintain and

enforce those provisions, at law or equity, as provided in this Chapter.

ii. No modification, removal or release of any provision of the Master Plan by the Township shall be permitted except upon the findings by the Board of Supervisors or its designee, following public notice. These findings must indicate that the changes are consistent with the efficient development and preservation of the entire Master Plan area, do not adversely affect the enjoyment of land abutting or across the street from the Master Plan development or the public interest and are not granted solely to confer a special benefit upon any person.

iii. The applicant may propose, and the Board of Supervisors may consider, modifications to the planting scheme contained within the Master Landscaping Plan from time to time provided, however, the intent of the Master Landscaping Plan is maintained and the bufferyard screening is not unduly diminished.

d. From time to time, the use of any structure(s) on a Master Plan lot may be changed to another use permitted in the district upon approval of an occupancy permit in accordance with the Township Code of Ordinances and the following:

i. Where the proposed use is a special exception or conditional use, the change must be submitted to the appropriate board for review and approval.

ii. Express conditions of a conditional use or special exception shall not conflict with the finally approved Master Plan.

iii. Where changes in elements of the Master Plan are necessary to meet the express conditional use conditions, the applicant shall process a revised Master Plan showing the conflicts between the conditional use's conditions and the Master Plan requirements and requesting approval of the revised Master Plan in accordance with this section.

iv. Where changes of a Master Plan are required and a new conditional use is also requested, the applications may be combined into a single proceeding.

v. Where changes of a Master Plan are required to enable a special exception, the Master Plan update must first be approved by the Board of Supervisors prior to Zoning Hearing Board approval.

vi. Any changes in the physical layout of a Master Plan lot shall only be approved as a land development plan unless the Zoning Officer determines the same is in compliance with the

following:

1. **Permitted modifications**

a. **General site layout - Minor revisions to the layout are permitted so long as the internal traffic patterns and principal building locations are substantially the same.**

b. **Building footprint - No more than 2,500 sq. ft. of additional principal floor area may be added to a proposed building.**

c. **Parking – The site must be able to support the minimum parking requirements of the proposed use(s).**

d. **Traffic - The modification shall not increase peak hour trips to the site by more than 2%; or, when a traffic study was not required as a part of the original submission, cause the project to exceed 100 peak hour trips.**

e. **Stormwater – The modifications must be approved by the Township Engineer, and must be recorded on a post construction as-built plan.**

f. **Impervious cover - The modifications must be zoning code compliant and the stormwater controls must be able to handle any additional runoff.**

g. **Site access – Driveways must be in substantially the same location as shown on the approved plan. Any major modification that is the result of a Federal, State or local agency shall be permitted.**

h. **Site lighting – Applicant must provide a revised plan that is sealed by a professional engineer, showing that the lighting continues to comply with the Subdivision and Land Development Ordinance (SALDO) and Zoning Ordinance (ZO) requirements.**

i. **Sanitary sewer – Modification must be approved by DTMA or the Township Sewage Enforcement Officer as appropriate.**

2. **Prohibited modifications**

a. **Dwelling units – No additional dwelling units may be proposed.**

b. **New buildings – No additional principal buildings of any size or accessory buildings greater than 1,000 sq. ft. may be proposed.**

c. **Health, safety and wellbeing – No modification that would reduce the health, safety and wellbeing of the public; or, that is otherwise contrary to the Township's Comprehensive Plan shall be permitted under this policy.**

d. **Waivers – All waivers of the SALDO requirements are subject to Planning Commission (PC) recommendation and Board of Supervisor (BOS) approval.**

e. **Conditions of land use approvals – Modifications to the plan may not expand, enlarge of violate any conditions of plan approval or conditions of zoning relief without first applying for and**

obtaining approvals for the proposed modification from either the Zoning Hearing Board (ZHB) or BOS, as may be applicable to the project.

3. **Documents to provide (as applicable)**

a. **Revised plans as necessary to show the features as approved and as modified.**

b. **Agreement to pay for any required engineering or third party reviews.**

c. **Revised Stormwater Management Plan, report and details of any alterations to a system or qualifying modifications.**

d. **Traffic impact analysis detailing modifications to peak hour and overall trips.**

e. **Revised lighting plan with professional certification that the modifications continue to comply with the SALDO and ZO requirements.**

f. **Recordable documents to memorialize any modifications to easements or right-of-ways.**

g. **A detailed narrative documenting all plan modifications.**

h. **All other information as may be necessary to understand and review the modifications.**

4. **Other Actions which may be Necessary.**

a. **Approval by Dauphin County Conservation District (DCCD)/DEP for modifications to the Post Construction Stormwater Management (PCSM) Plan, National Pollutant Discharge Elimination System (NPDES), and or other such approvals.**

b. **Reduction to financial security amount. Must be recommended by Township Engineer and approved by BOS.**

c. **Increase to financial security amount. Must be recommended by Township Engineer and approved by BOS and in place prior to building/zoning permit issuance.**

d. **Design Advisory Board approvals if required.**

e. **Other outside agency approvals as may be necessary.**

11. Enforcement.

a. Provisions in favor of the Township. An express provision of, or commitment in, the Master Plan relating to the use, bulk and location of buildings and structures, the quantity and location of common open space, except as otherwise provided in this Article, and the intensity of use shall run as a covenant over the land in favor of the Township. As provided by law, these provisions shall be enforceable in law or in equity by the Township without limitation on any powers of regulation otherwise granted the Township by law.

b. Release of rights. Owners of the lots or facilities may, to the extent and in the manner expressly authorized by the provisions of the Master Plan, modify, remove, or release their rights to enforce the provisions of the Master Plan, but no such action shall affect the right of the

Township to enforce the provisions of the Master Plan as approved and in accordance with the provisions of this Chapter.

§225-403.5401.4. Signage.

§225-403.5401.4.A. Purpose and Intent.

A. It is the purpose of this article to regulate the location, size, placement and certain features of signs necessary to enable the public to locate goods, services and facilities without difficulty and confusion, to encourage the general attractiveness of the community and to protect the property values therein. Therefore, it is the intention of this chapterChapter to establish regulations governing the display of signs which will:

1. Promote and protect the public health, safety and welfare.

2. Enhance the economy and the business and industry in the Township by promoting the reasonable, orderly and effective display of signs, and thereby encourage efficient communication with the public.

3. Regulate the number, size, location, movement, and illuminations of signs so as to not overload the public's capacity to receive information or which increase the probability of traffic congestion and accidents by distracting attention or obstructing vision.

4. Regulate the number, size, location, movement, and illuminations of signs so that they are able to clearly communicate the intended message while minimizing clutter, unsightliness and confusion.

5. Promote signs which are compatible with their surroundings, are appropriate to the type of activity to which they pertain and are expressive of the identity of the proprietors and other persons displaying signs.

6. Encourage signs that support and stimulate business within the Township.

7. Promote a continuation of the unique sense of place and heritage of Derry Township the Township that is identifiable through pictures, architecture and elements of Hershey's storied manufacturing past.

B. Any sign hereafter erected, placed, constructed, altered and/or maintained within the Limited Sign, General Sign or Downtown Commercial Overlay Sign Districts shall conform with the provisions of this Chapter.

§225-403.5401.4.B. Permit RequiredRequirements.

A. Except for signs exempted from permit under § 225-403.5401.4.C of this Chapter, no person, firm, corporation or partnership shall erect, place, alter, construct or cause to be erected, placed, altered or constructed, any sign on any property within the Township until a permit for the same has been granted by the Township's Department of Community Development when required by this chapterChapter. Property owners who authorize or allow any sign on their property shall ensure that all provisions of this chapterChapter are adhered to and will be held responsible for any violations. In cases where a sign is erected by others without the property owner's permission and the property owner is unable or unwilling to remove said sign, the Township may remove the sign.

B. Application for a permit shall be made on an authorized Township permit application available at the Department of Community Development and shall be accompanied by the following documents:

1. A detailed scaled drawing showing the sign size and message, clearly and legibly.

2. A detailed scaled drawing showing the proposed sign location.

3. A description of its construction and mounting methods, including a materials description of materials,and colors of sign, lighting, and supporting structure.

4. Written authorization of the owner of the property if other than the applicant.

C. After a permit to erect, place, alter or construct a sign has been obtained and work has been completed, including any foundation or electrical inspections, as specified in the application, the owner of the sign shall notify the Township's Department of Community Development which will then inspect the sign. If the sign is as permitted and does not violate any provisions of this or any other applicable regulation, a registration number will be provided to the applicant/owner to be permanently affixed to the sign. If anyone should remove or attempt to remove or alter such number, they shall be in violation of this Chapter.

D. Permit fees shall be in payable in amounts and at times as established from time to time by resolution of the Board of Supervisors.

§ 225-403.5401.4.C. Signs and activities permitted in all sign overlay districts; permit exceptions.

The following signs or activities are permitted in all Sign Overlay Districts but shall not require a zoning sign permit:

A. Signs that are not readable from any street and from any lot line as determined using Appendix XXA.

B. Nonstreet fronting signs and all signs within a building that are not designed to be visible from outside the building.

C. Signs of a constituted governmental body.

D. The display of flags of a nation; association of nations; governmental subdivisions; military flags of forces of the United States of America and forces of nations with which diplomatic relations are conducted with the United States of America; nonprofit organizations; educational organizations accredited by the State of Pennsylvania; corporations; and flags memorializing a national defense event or situation past or present. See § 225-___ for special conditions regarding certain signs.

E. Memorial signs and tablets or historic markers and monuments when erected by the State of Pennsylvania or Derry Township or other constituted governmental body.

F. Legal notices.

G. Signs which display address numbers only with a sign area of 5 square feet or less.

H. Seasonal and holiday displays and decorations which do not advertise a product or service.

I. Normal maintenance and repair of a conforming or existing nonconforming sign, exclusive excluding of any alteration of the sign as the term is defined in this Chapter.

J. Signs and banners advertising civic and community events only when authorized by the Board of Supervisors and banners advertising grand opening events subject to § 225-401.4.F.A.10____.

K. Home/garage/yard sale signs subject to § 225-401.4.F.A.1.

L. Public auction signs subject to § 225-401.4.F.A.2.

M. Temporary real estate signs subject to § 225-401.4.F.A.3.

N. Temporary contractor's signs subject to § 225-401.4.F.A.4.

O. Political campaign signs subject to § 225-401.4.F.A.8.

P. Temporary signs for civic and community events, subject to § 225-401.4.F.A.5.

Q.

R.Q. Prohibition signs, such as "No Trespassing," "No Dumping," "No Hunting," and other similar signs erected by the property owner for the protection or preservation of his or her property subject to § 225-401.4.F.A.6.

S.R. Temporary window signs as defined by this Chaptersubject to § 225-.

T.S. Temporary directional signs subject to § 225-401.4.F.A.7.

U.T. Signs on gasoline dispensing pumps, including price registers, gallonage registers, pump identification numbers; instruction signs pursuant to the use of pumps and those signs required by law to be displayed on the pump, but not including the gasoline brand names, unless the lettering or symbol is four square feet or less in area and is limited to one such identification on a maximum of two sides of each pump.

V.U. Window and door signs indicating direction of door movement, hours of operation, credit institutions accepted, civic and commercial affiliations, and other types of noncommercial messages if each such signs is less than one square foot in area and has no advertising value.

W.V. Celebration flags subject to § 225-401.4.F.A.11.

X.W. Traffic control signs such as stop, one-way, do-not enter and parking.

Y.X. Lamp-post flags subject to § 225-401.4.F.A.12.

Z.Y. Murals and other street art subject to § 225-422.

AA.Z. Open flags subject to § 225-401.4.F.A.13.

BB.AA. Sandwich board signs subject to § 225-401.4.F.A.14.

CC.BB. Menu boards, which are less than 2 square feet.

§225-403.5401.4.D. Non-Street Fronting Signs.

The following signs are only permitted if they are non-street fronting signs or are not readable from a street, in accordanceing withto Appendix A from a streetA:

A. Signs, other than official traffic signs, which are attached or otherwise affixed to trees or other vegetation, rocks, street lights, utility poles, or other similar structures except as otherwise permitted in this Chapter.

B. Signs which imitate traffic control devices.

C. Banners, except for banners permitted in § 225-401.4.F.A.10; flags, except for flags permitted in § 401.4.F.A.9; and spinners, streamers, valances and similar attention attracting devices.

D. String lights, strip lights used to attract attention other than seasonal holiday decorations and building accent lighting.

E. Inflatable signs.

F. Roof signs.

G. Flashing, beacon, strobing, moving, animated, or scrolling image signs, except for those signs of a constituted governmental body, Commercial Entertainment signs, and temporary directional signs.

H. Portable signs, except for sandwich board signs permitted in §225-401.4.F.A.14, and those signs necessary to be used as warning signs to bring attention to construction activities, temporary road hazards, or similar conditions.

I. Vehicle signs, as defined herein.

J. Billboards, unless authorized by the grant of conditional use by the Township Board of Supervisors pursuant to § 225-501.41.

K. Any sign erected in such a manner as to obstruct free and clear vision on any street or driveway intersection or obstruct the view of any traffic sign or signal.

L. Any sign which is erected within any street right-of-way, public utility right-of-way or railroad right-of-way, except official traffic, government, utility or railroad signs which have no advertising value, and except temporary and permanent directional signs and banners advertising community events when specifically authorized by the Township Board of Supervisors.

M. Any sign, including its support structure, advertising a profession, use, activity or business no longer conducted or which advertises a profession, use, activity or business which is illegal.

N.M. Any sign which obstructs free ingress to or egress from a fire escape, door, window or other means of ingress or egress.

O.N. Any sign painted or affixed to any outdoor bench, chair, or similar article, except signs stating sponsorship or memorial markers.

P.O. Any sign, except authorized directional signs, billboards, political campaign signs, home/garage/yard sales signs, civic/charitable signs and temporary window signs, which are located on a site other than the site to which the advertisement or message is directed.

Q.P. Signs greater than 8 square feet which are erected so as to have the back or nonmessage side of the sign area visible from any adjacent street right-of-way, other than alleys.

R.Q. Interactive sign

S.R. Signs that display any universally accepted vulgar (or racist) message or imagery or sexually oriented element as defined herein.

§225-403.5401.4.F. Special Conditions and Regulations for Signs or Activities Not Requiring Permit.

A. Signs permitted in the Limited Sign, General Sign, and Downtown Core Sign overlays. The following signs are exempted from requiring a permit by § ____ but are subject to the following provisions:

1. Home/garage/yard sales signs. Signs advertising home, garage and yard sales and the like, as differentiated from signs advertising established commercial enterprises, may be erected subject to the following provisions:

   a. Signs may be erected on the same street and/or within 1,600 feet of the sale site.

   b. The area of any such sign shall not exceed four square feet per side.

   c. The height shall not exceed six feet.

   d. Only one such sign may be erected on any property, unless the property fronts on two streets, in which case one sign is authorized on each street frontage.

   e. The sign shall be installed no earlier than two days prior to the sale and shall be removed within two days after the sale.

2. Public auction signs. Signs advertising public auctions or sales, as differentiated from signs advertising established commercial enterprises, may be erected subject to the following provisions:

   a. The sign may be erected only upon the property on which the sale is going to be held.

   b. The area of any such sign shall not exceed six square feet per side.

   c. The height shall not exceed six feet.

   d. Only one such sign may be erected on any property, unless the property fronts on two streets, in which case one sign is authorized on each street frontage.

   e. The sign shall be installed no earlier than two weeks prior to the date of the sale and shall be removed no later than two days after the date of the sale.

3. Temporary real estate signs. Signs advertising the sale, lease or rental of property may be erected subject to the following:

   a. One sign may be erected for each 300 feet of frontage or fraction thereof.

   b. The area of one side of any such sign shall not exceed eight square feet, except that the area of the sign may be increased to a size not to exceed 32 square feet per side when the sign is erected a minimum distance of 100 feet from any dwelling located on the same side of the street as the sign and the sign is located in the General Sign overlay.

   c. Such signs may be erected only on the property to which the sign pertains, shall be removed within two days after the settlement of the sale or consummation of the lease or rental.

d. The height of a real estate sign permitted to have a maximum area of eight square feet per side shall be six feet, and the maximum height of a sign permitted to be 32 square feet shall be 10 feet.

4. Temporary contractor signs. Signs advertising construction activities on a property may be erected subject to the following:

   a. One sign may be erected for each 300 feet of frontage or fraction thereof.

   b. The area of one side of any such sign shall not exceed eight square feet, except that the area of the sign may be increased to a size not to exceed 32 square feet per side when the sign is erected a minimum distance of 100 feet from any dwelling located on the same side of the street as the sign and the sign is located in the General Sign or Downtown Core Sign overlay.

   c. Such signs may be erected only on the property to which the sign pertains, unless the Zoning Officer determines that off-site signage may be necessary for the safety of traffic control of construction type vehicles. Off-site signage shall be subject to any applicable property owner approval.

   d. All signs shall be removed within two days after the construction activities on the property have been completed.

   e. The height of a temporary contractor's sign that is permitted to have a maximum area of eight square feet per side shall be six feet, and the maximum height of a sign permitted to be 32 square feet in area shall be 10 feet.

5. Temporary Civic and community signs. Signs advertising charitable organizations or their activities may be erected subject to the following provisions:

   a. The area of any such sign shall not exceed eight square feet per side, per organization or activity up to the maximum area allowed in the applicable sign overlay for the sign type being proposed.

   b. The height shall not exceed eight feet.

   c. The sign must advertise a charitable organization or civic event located in Derry Township.

   d. Signs advertising activities may be erected no earlier than two weeks prior to the date of the activity and shall be removed no later than two days after the completion of the activity.

6. Prohibition signs may be erected subject to the following provisions:

   a. One sign may be erected for each 100 feet of street perimeter.

   b. The area of any such sign shall not exceed four square feet per side.

   c. Sign shall not exceed six feet in height.

7. Temporary directional signs. Temporary directional signs may be erected when, in the opinion of the Derry Township Chief of Police or Director of Community Development, such sign or signs are necessary to facilitate the safe and efficient traffic flow for special sports, school, entertainment, amusement, recreational, theatrical, cultural or historical events, subject to the following provisions:

a. The area of such signs shall not exceed eight square feet per side.

b. The height of such sign shall not exceed six feet.

c. The sign shall be erected no earlier than two days prior to the special event and shall be removed within one day following the special event.

c.d. If necessary to facilitate larger traffic volumes for events expecting to have in excess of 1,500 attendees, larger signs may be used.

8. Political signs may be erected subject to the following provisions:

a. The area of any such sign shall not exceed eight square feet per side.

b. The height of any such sign shall not exceed four feet.

c. Signs may be erected not more than 30-day prior to the election and shall be removed within two days after the election.

9. Flags.

a. Corporate flags, nonprofit organization flags and educational organization flags shall not be displayed at more than twice the height of the tallest building located on the same site as the flag when a ground or wall mounted flagpole is used.

b. See §225-206.I.2 for maximum height exceptions for roof mounted flagpoles.

10.c. Corporate flags, nonprofit organization flags and educational organization flags shall be displayed only on a site where the corporation or organization's facilities exist, a maximum of three corporate flags per 100 feet of road frontage may be displayed on a property.

11.10. BannersGrand Opening Signs.

a. Signs and Bbanners advertising a grand opening event may be erected on the property where the facility which is having a grand opening is located.

b. Such grand opening signs and banners may be displayed for a maximum period of time of four weeks.

c. Such grand opening signs and banners shall be displayed no longer than two weeks before the commencement of the grand opening event, nor shall any grand opening banner be displayed later than two weeks after the commencement of the grand opening event.

12.11. Celebration flags.

a. A maximum of three celebration flags per 100 feet of road frontage may be displayed on a property and a maximum of three celebration flags per nonresidential entity may be displayed on a property.

b. Celebration flags may have a maximum size of 3’ high by 5’ long.

13.12. Lamppost flags.

a. A maximum of two lamppost flags may be erected on each lamppost.

b. Lamppost flags shall have a maximum area of 20 square feet per side and shall be placed on a lamppost in a manner that will provide a minimum of eight feet clearance beneath the bottom of the flag and the finished grade of the surface below the flag unless the flag or portion thereof is located over a parking space in which case the minimum clearance shall be 12 feet beneath the bottom of the flag and the finished grade of the parking space.

c. Lamppost flags shall not depict pricing information or hours of operation.

14.13. Open Flags.

a. One open flag may be displayed per business during regular business hours, if a sandwich board sign is not utilized.

b. An open flag must be stored inside a building or structure during non-business hours.

c. Open flags may have a maximum size of 3' high by 5' long.

d. Open flags shall only state the word "open", and shall not advertise or promote a specific individual, product, individual brand name, or off-premises business, service, or corporation.

e. Open flags may be attached to a sign pole, another site sign, or the face of a building. The bottom of flags must be at least 8' high when suspended over sidewalks, but at no time shall the top of the flag be greater than 15' from the ground surface. Open flags may not impede sidewalks or walkways, and/or extend into the public right-of-way or adversely affect traffic sight distances.

f. The open flag shall be made of durable outdoor fabric and shall be maintained in an un-tattered and un-faded manner.

15.14. Sandwich board sign.

a. One sign may be displayed per business during regular business hours, if an open flag is not utilized.

b. The sign must be stored inside a building or structure during non-business hours.

c. The area of such sign shall not exceed 8.5 square feet per side. The maximum size of such sign shall be no greater than four feet in height and three feet in width.

d. The sign may be placed on a sidewalk, grass area, or landscaped area directly in front of the associated establishment. The sign must be placed in such a manner to maintain a minimum of four feet of pedestrian passage area and shall not obstruct the vision of motorists at street intersections or where access drives intersect with a street. The owner of a sandwich board sign shall place and locate the sign in a manner that will not cause any damage to any person and/or property.

e. The sign shall be weighted at the base or otherwise designed so that the sign resists being moved by strong winds; however, no sign shall be chained, tied, or otherwise affixed to any object, structure, or the ground.

f. The sign must be constructed of materials that present a finished professional appearance. The sign frame shall be painted or stained wood or anodized aluminum or metal. Plastic framed signs are only permitted outside of the Downtown Core Sign overlay district. Spray painted signs are prohibited, however, chalkboard signs shall

be permitted. Windblown devices, including balloons, flags and streamers, may not be attached or otherwise made part of the sign.

g. The message shall be changed no less frequently than on a weekly basis.

B. General Sign Overlay. Signs located in the General Sign Overlay shall comply with the following requirements regarding sign area, allowable number and types of signs, location of signs and sign material, illumination and design specifications:

B.

1. The following signs are permitted in the General Sign Overlay, in addition to those permitted in § 225-401.4.F:

Table 367: General Sign Overlay District

SIGN TYPE	GENERAL SIGN OVERLAY DISTRICT							
	PERMITTED NUMBER	MAXIMUM SIGN FACE DIMENSION (FEET)		MAXIMUM HEIGHT (FEET)	MAXIMUM AREA per side (sq ft.)	PERMITTED MATERIALS	ILLUMINATION	SPECIAL NOTES
		VERTICAL	HORIZONTAL					
FREE-STANDING SIGN	1/ street frontage w/o pole sign	8	8	8	32	wood, metal, brick, stone, plastic, and glass	steady white internal or external light	
GROUND SIGN	1/ street frontage	4	10	4	24	wood, metal, brick, stone, plastic, and glass	steady white internal or external light	
POLE SIGN	1/ street frontage w/o free-standing sign	7	8	15	25	wood, metal, brick, stone, plastic, and glass	steady white internal or external light	1
WALL SIGN	any number within allowable number of signs	3	any size within allowable sign area	see special notes	any size within allowable sign area	wood, metal, brick, stone, plastic, and glass	steady white internal or external light	2
PROJECTING SIGN	any number within allowable number of signs	3	6	see special notes	12	wood, metal, brick, stone, plastic, and glass	steady white internal or external light	1, 2, 3
AWNING SIGN	any number within allowable number of signs	3	5	n/a	12 sq. ft. or 75% of vertical surface of awning	cloth or similar flexible material	steady white external light	4
CANOPY SIGN	any number within allowable number of signs	3	10	18	20	wood, metal, brick, stone, plastic, and glass	steady white external light	5
PERMANENT WINDOW SIGN	any number within allowable number of signs	n/a	n/a	n/a	15% of each window or door area	n/a	n/a	6
TEMPORARY WINDOW SIGN	any number within allowable number of signs	n/a	n/a	n/a	15% of each window or door area in addition to permanent window signs	n/a	n/a	6
INFORMATIONAL SIGN	as required	5	5	8	4	wood, metal, brick, stone, plastic, and glass	steady white internal or external light	7
DIRECTIONAL SIGN	as necessary	6	8	12	40	wood, metal, brick, stone, plastic, and glass	n/a	8, 9, 10
DRIVE-THROUGH MENU READER BOARD	1/ drive through lane	8	8	8	50	wood, metal, brick, stone, plastic, and glass	steady white internal or external light	11
SCOREBOARD	1/ athletic field	n/a	n/a	20	200	wood, metal, brick, stone, plastic, and glass	steady white internal or external light	12
MULTIUSE IDENTIFICATION SIGN	1/ street frontage w/o free-standing sign or pole sign	8 to 13	8 to 13	15	35 to 75	wood, metal, brick, stone, plastic, and glass	steady white internal or external light	

** [BJW7] The maximum sign dimensional criteria for multi-use identification signs varies with the number of entities which exist on a single parcel of land and which advertise on the sign in accordance with the following table:

Table 378: Maximum sign dimensional criteria for multi-use identification signs

Number of Entities	Maximum Sign Face Area	Maximum Sign Height	Maximum Sign Face Dimension	
			Vertical	Horizontal
2	35	15	8	8
3	40	15	9	9
4	45	15	10	10
5	50	15	10	10
6	55	15	11	11
7	75	25	11	11
8	85	25	12	12
9	95	25	12	12
10 or more	105	25	15	15

SPECIAL NOTES

1. Minimum of eight feet of clearance from the bottom of sign to the ground.

2. Signs shall not exceed the height of the upper building face, extend above the roof eave or extend above the lower sill of any upper story window, whichever is lowest.

3. Signs may extend a maximum of six feet from the building face and extend over a sidewalk no more than 1/3 of the sidewalk width, whichever is less.

4. The awning must have a minimum of seven feet of clearance to the ground where pedestrian traffic occurs below the awning.

5. Sign cannot extend above or below the roof structure.

6. Signs less than 2 square feet do not count in total permitted sign area or total number of permitted signs.

7. Signs do not count in total permitted sign area or total number of permitted signs.

8. Only directional signs for tourist attractions, high traffic industrial uses, churches, hospitals, and for shared parking are permitted,

9. Sign must contain only the name of the facility and the necessary arrows or information to reach the destination in a safe and efficient manner.

10. The sign shall not contain a message or symbols having advertising value.

11. May not contain advertising or print of a scale intended to bear advertising to the general off-premises public.

12. May contain a commercial message not to exceed 10% of the total sign area.

2. Allowable sign area.

   a. The total allowable sign area for all applicable signs shall not exceed one square foot for each linear foot of building front per street frontage, not to exceed a total of 150 square feet. All signs, except for those exempted from permit requirements in § ___, information signs, directional signs, drive-through menu reader boards and commercial entertainment identification signs, shall be counted in calculating the allowable sign area. Wall signs on those properties abutting a public street or public streets, other than alleys, for a distance in excess of 300 feet shall not be counted in calculating total sign area.

   b. On multistreet frontage locations, the allowable sign area for all applicable signs on each additional street frontage other than the principal street frontage shall be located only on that street frontage and shall not exceed one square foot for each linear foot of building front on the additional street frontage, but not to exceed a total of 100 square feet. All signs, except for those exempted from permit requirements in §225-403.5401.4.C___, information signs, directional signs, drive-through menu reader boards and commercial entertainment identification signs shall be counted in calculating the allowable sign area. Wall signs on those properties abutting a public street or public streets, other than alleys, for a distance in excess of 300 feet shall not be counted in calculating total sign area.

   c. The Township Zoning Hearing Board may grant a special exception to allow larger signs or greater than the prescribed total sign area, or a greater number of signs per street frontage in accordance with Section 225-502.11

3. Number and types of signs allowed.

   a. The allowable number of signs shall not exceed three per street frontage. All signs, except for those exempted from permit requirements in § 225-403.5401.4.C___, information signs, directional signs, window signs less than 2 square feet, drive-through menu reader boards, wall signs and/or projecting signs for multiple businesses operating on a single property and commercial entertainment identification signs shall be counted in calculating the number of allowable signs. Wall signs on those properties abutting a public street or public streets, other than alleys, for a distance in excess of 300 feet shall not be counted in calculating total number of allowable signs.

   b. There shall be no more than three types of signs employed per street frontage. All signs, except for those exempted from permit requirements in § 225-403.5401.4.C§ ___, information signs, directional signs, window signs less than 2 square feet, drive-through menu reader boards, and commercial entertainment identification signs shall be counted in calculating the types of allowable signs.

   c. Only one free-standing sign, pole sign or multi-use identification sign shall be permitted per street frontage.

4. Location of signs. No sign shall be located within two feet of a side yard area as defined and required in this Chapter unless specifically authorized by this Chapter.

5. Materials, illumination, color and shape.

   a. Signs shall not use reflectorized background or letters or figures, except for directional signs, traffic control signs and signs of a constituted governmental body.

b. Signs and supporting structures shall be constructed of wood, metal, brick, stone, plastic or glass or a combination of these materials.

c. Sign and supporting structure materials and colors shall be compatible with the buildings and other signs on the premises.

d. Sign supporting structures, other than buildings, shall only be one color.

e. Signs shall be illuminated only by a white, steady, internal or external stationary light of reasonable intensity directed at the sign, without causing glare for motorists, pedestrians or neighboring properties. Awning may only be externally illuminated. Colored neon-style signs may be utilized if such signs are located inside a window or door.

C. Downtown Core Sign overlay. Signs located in the Downtown Corel Sign Overlay district shall comply with the following requirements regarding sign area, allowable number and types of signs, location of signs and sign material, illumination and design specifications:

1. The following signs are permitted in the Downtown Core Sign overlay, in addition to those permitted in § 225-401.4F. :

Table 389: Downtown Commercial Sign Overlay District

SIGN TYPE	DOWNTOWN COMMERCIAL SIGN OVERLAY DISTRICT							
	PERMITTED NUMBER	MAXIMUM SIGN FACE DIMENSION (FEET)		MAXIMUM HEIGHT (FEET)	MAXIMUM AREA per side (sq ft.)	PERMITTED MATERIALS	ILLUMINATION	SPECIAL NOTES
		VERTICAL	HORIZONTAL					
FREE-STANDING SIGN	1/ street frontage	8	8	8	20	wood, metal, brick, stone, high-density urethane sign board, and glass,	steady white external light	
GROUND SIGN	1/ street frontage	4	8	4	20	wood, metal, brick, stone, high-density urethane sign board, and glass,	steady white external light	
POLE SIGN	0	0	0	0	0	none	n/a	
WALL SIGN*	any number within allowable number of signs	3	any size within allowable sign area	see special notes	any size within allowable sign area	wood, metal, brick, stone, high-density urethane sign board, and glass,	steady white internal or external light	2
PROJECTING SIGN	any number within allowable number of signs	3	6	see special notes	12	wood, metal, brick, stone, high-density urethane sign board, and glass,	steady white internal or external light	1, 2, 3
AWNING SIGN	any number within allowable number of signs	1.5	10	see special notes	10 sq. ft. or 75% of vertical surface of awning	cloth or similar flexible material	steady white external light	4
CANOPY SIGN	any number within allowable number of signs	1.5	10	18	15	wood, metal, brick, stone, high-density urethane sign board, and glass,	steady white external light	5
PERMANENT WINDOW SIGN	any number within allowable number of signs	n/a	n/a	n/a	15% of each window or door area	n/a	n/a	6
TEMPORARY WINDOW SIGN	any number within allowable number of signs	n/a	n/a	n/a	15% of each window or door area in addition to permanent window signs	n/a	n/a	6
INFORMATIONAL SIGN	as required	5	5	8	4	wood, metal, brick, stone, high-density urethane sign board, and glass,	steady white internal or external light	7
DIRECTIONAL SIGN	as necessary	4	4	8	16	wood, metal, brick, stone, high-density urethane sign board, and glass,	n/a	8, 9, 10
DRIVE-THROUGH MENU READER BOARD	0	0	0	0	0	none	n/a	
SCOREBOARD	1/ athletic field	n/a	n/a	15	150	wood, metal, brick, stone, high-density urethane sign board, and glass,	steady white internal or external light	11
MULTIUSE IDENTIFICATION SIGN	1/ street frontage w/o free-standing sign	8 to 13	8 to 13	15	30 to 70	wood, metal, brick, stone, high-density urethane sign board, and glass,	steady white internal or external light	

SPECIAL NOTES

1. Minimum of eight feet of clearance from the bottom of sign to the ground.

2. Signs shall not exceed the height of the upper building face, extend above the roof eave or extend above the lower sill of any upper story window, whichever is lowest.

3. Signs may extend a maximum of six feet from the building face and extend over a sidewalk no more than 1/3 of the sidewalk width, whichever is less.

4. The awning must have a minimum of seven feet of clearance to the ground where pedestrian traffic occurs below the awning.

5. Sign cannot extend above or below the roof structure.

6. Signs less than 2 square feet do not count in total permitted sign area or total number of permitted signs.

7. Signs do not count in total permitted sign area or total number of permitted signs.

8. Only directional signs for tourist attractions, high traffic industrial uses, churches, hospitals, and for shared parking are permitted.

9. Sign must contain only the name of the facility and the necessary arrows or information to reach the destination in a safe and efficient manner.

10. The sign shall not contain a message or symbols having advertising value.

11. May not contain advertising or print of a scale intended to bear advertising to the general off-premises public.

** [BJW8]Multiuse identification sign. One sign allowed per street frontage if no other pole sign or free-standing sign is erected. The maximum sign dimensional criteria varies with the number of entities which exist on a single parcel of land and which advertise on the sign in accordance with the following table:

Table 3940: Maximum sign dimensional criteria for multi-use identification signs

			Maximum Sign Face Dimension	
Number of Entities	**Maximum Sign Face Area**	**Maximum Sign Height**	**Vertical**	**Horizontal**
2	30	10	8	8
3	35	10	9	9
4	40	10	10	10
5	45	12	10	10
6	50	12	11	11
7	55	12	11	11
8	60	15	12	12
9	65	15	12	12

Number of Entities	Maximum Sign Face Area	Maximum Sign Height	Maximum Sign Face Dimension Vertical	Maximum Sign Face Dimension Horizontal
10 or more	70	15	13	13

Landmark Sign. To promote innovation in signage for lots within the Downtown Sign Zoning Overlay, a landmark sign may be constructed as a conditional use in accordance with Section 225-501.56.

2. Allowable sign area.

   a. The total allowable sign area for all applicable signs shall not exceed one square foot for each linear foot of building front per street frontage, not to exceed a total of 100 square feet, except that residential structures converted to a commercial use, in whole or in part, shall not exceed a total of 75 square feet. All signs except for those exempted from permit requirements in § 225-403.5401.4.C§ ___, information signs, projecting signs, window signs less than 2 SF, and directional signs, shall be counted in calculating the allowable sign area. Wall signs on those properties abutting a public street or public streets, other than alleys, for a distance in excess of 300 feet, shall also not be counted in calculating total sign area.

      1. On multistreet frontage locations, the allowable sign area for all applicable signs on each additional street frontage other than the principal street frontage shall be located only on that street frontage and shall not exceed one square foot for each linear foot of building front on the additional street frontage, not to exceed a total of 75 square feet. All signs except for those exempted from requiring permits in §§ 225-403.5401.4.C225- ___, information signs, window signs less than 2 square feet, and directional signs, shall be counted in calculating the allowable sign area. Wall signs on those properties abutting a public street or public streets, other than alleys, for a distance in excess of 300 feet, shall also not be counted in calculating total sign area.

      2. For residential structures converted to commercial use:

         a. The total allowable sign area for all applicable signs shall not exceed one square foot for each linear foot of building front per street frontage, not to exceed a total of 75 square feet. All signs except for those exempted from permit requirements in § 225-403.5401.4.C§ **225-** ___, information signs, window signs less than 2 square feet, and directional signs, shall be counted in calculating the allowable sign area. Wall signs on those properties abutting a public street or public streets, other than alleys, for a distance in excess of 300 feet, shall also not be counted in calculating total sign area.

         b. On multi-street frontage locations, the allowable sign area for all applicable signs on each additional street frontage other than the principal street frontage shall be located only on that street frontage and shall not exceed one square foot for each linear foot of building front on

the additional street frontage, not to exceed a total of 50 square feet. All signs except for those exempted from requiring permits in § 225-403.5401.4.C, § 225-___, information signs, window signs less than 2 square feet, and directional signs, shall be counted in calculating the allowable sign area. Wall signs on those properties abutting a public street or public streets, other than alleys, for a distance in excess of 300 feet, shall also not be counted in calculating total sign area.

b. The Township Zoning Hearing Board may grant a special exception to allow larger signs or greater than the prescribed total sign area, or a greater number of signs per street frontage in accordance with Section 225-502.11. ÷

1. ___.

3. Number and types of signs allowed.

a. The allowable number of signs shall not exceed three per street frontage or two per business operating on the same lot. All signs except for those exempted from permit requirements in § 225-403.5401.4.C§225-___, information signs projecting signs, window signs less than 2 SF, and directional signs, shall be counted in calculating the number of allowable signs. Wall signs and/or projecting signs and multiuse identification sign for multiple businesses operating on a single property shall not be counted in calculating the total number of signs. Wall signs on those properties abutting a public street or public streets, other than alleys, for a distance in excess of 300 feet, shall also not be counted in calculating the total number of signs.

b. There shall be no more than three types of signs employed per property. All signs except for those exempted from permit requirements in § 225-403.5401.4.C§225-___, information signs window signs less than 2 SF, wall signs and/or projecting signs for multiple businesses operating on a single property, and directional signs, shall be counted in calculating the types of allowable signs. Wall signs on those properties abutting a public street or public streets, other than alleys, for a distance in excess of 300 feet, shall also not be counted in calculating the total number of signs.

4. Location of signs. No sign shall be located within two feet of a side yard area as defined and required in this Chapter. A free-standing sign or ground sign shall be erected such that all parts of the sign are at least 10 feet from the adjacent street right-of-way line, or on the building side of the sidewalk, whichever is closest to the street.

5. Materials, illumination, color and shape.

a. Signs shall not utilize reflectorized background or letters or figures, except for directional signs, traffic control signs and signs of a constituted governmental body.

b. Signs and supporting structures shall be constructed of wood, metal, brick, stone, high-density urethane sign board having a minimum density of 10 pounds per cubic foot, glass, or a combination of these materials. High-density urethane sign board shall only be used when the material is finished with paint or a similar decorative finish such as gold or silver leaf.

c. Signs and supporting structure materials and colors shall be compatible with the buildings and other signs on the premises.

d. Signs faces shall not be composed of more than four colors not including black, white and gold, except that a portion of the sign area may be composed of unlimited colors to the extent that not more than 150 contiguous square inches having a maximum

horizontal dimension of 20 inches and a maximum vertical dimension of 20 inches of sign area shall exceed the maximum three colors other than black, white and gold.

e. Sign supporting structures, other than buildings, shall be only one color.

f. Signs shall be illuminated only by a white, steady, stationary external light of reasonable intensity directed at the sign, without causing glare for motorists, pedestrians or neighboring properties. Awnings may only be externally illuminated. Colored neon style signs may be utilized if such signs are located inside a window or door.

D. Limited Sign Overlay. Signs located in the Limited Sign Overlay district shall comply with the following requirements regarding sign area, allowable number and types of signs, location of signs and sign material, illumination and design specifications:

1. The following signs are permitted in the Limited Sign overlay, in addition to those permitted in §225-403.5401.4.F, except that signs for nonresidential uses and signs for uses conducted within a dwelling are permitted in accordance with the General Commercial Sign overlay regulations:

Table 4~~0~~1: Limited Sign Overlay District

SIGN TYPE	LIMITED SIGN OVERLAY DISTRICT							
	PERMITTED NUMBER	MAXIMUM SIGN FACE DIMENSION (FEET)		MAXIMUM HEIGHT (FEET)	MAXIMUM AREA (SQ. FT.)	PERMITTED MATERIALS	ILLUMINATION	SPECIAL NOTES
		VERTICAL	HORIZONTAL					
FREE-STANDING SIGN	0	0	0	0	0	none	n/a	
GROUND SIGN	1/ street frontage	4	5	4	8	wood, metal, brick, stone, high-density urethane sign board and glass	steady white external light	
POLE SIGN	0	0	0	0	0	none	n/a	
WALL SIGN*	any number within allowable number of signs	3	any size within allowable sign area	see special notes	any size within allowable sign area	wood, metal, brick, stone, high-density urethane sign board and glass	steady white internal or external light	2
PROJECTING SIGN	any number within allowable number of signs	4	4	see special notes	4	wood, metal, brick, stone, high-density urethane sign board, and glass,	steady white internal or external light	1, 2, 3
AWNING SIGN	any number within allowable number of signs	0.75	5	see special notes	3.75	cloth or similar flexible material	steady white external light	4
CANOPY SIGN	0	0	0	0	0	none	n/a	
PERMANENT WINDOW SIGN	any number within allowable number of signs	n/a	n/a	n/a	15% of each window or door area	n/a	n/a	5
TEMPORARY WINDOW SIGN	any number within allowable number of signs	n/a	n/a	n/a	15% of each window or door area in addition to permanent window signs	n/a	n/a	5
INFORMATIONAL SIGN	as required	3	2	5	2	wood, metal, brick, stone, high-density urethane sign board, and glass,	steady white internal or external light	6
DIRECTIONAL SIGN	0	0	0	0	0	none	n/a	
DRIVE-THROUGH MENU READER BOARD	0	0	0	0	0	none	n/a	
SCOREBOARD	1/ athletic field	n/a	n/a	15	150	wood, metal, brick, stone, high-density urethane sign board, and glass,	steady white internal or external light	7
MULTIUSE IDENTIFICATION SIGN	0	0	0	0	0	none	n/a	

SPECIAL NOTES

1. Minimum of eight feet of clearance from the bottom of sign to the ground.

2. Signs shall not exceed the height of the upper building face, extend above the roof eave or extend above the lower sill of any upper story window, whichever is lowest.

3. Signs may extend a maximum of five feet from the building face and extend over a sidewalk no more than 1/3 of the sidewalk width, whichever is less.

4. The awning must have a minimum of seven feet of clearance to the ground where pedestrian traffic occurs below the awning.

5. Signs less than 2 square feet do not count in total permitted sign area or total number of permitted signs.

6. Signs do not count in total permitted sign area or total number of permitted signs.

7. May contain a commercial message not to exceed 10% of the total sign area.

2. Allowable sign area.

   a. The total sign area of all signs shall not exceed 16 square feet per street frontage. All signs, except those exempted from permit requirements in § 225-403.5401.4.C, and information signs, shall be counted in calculating the allowable sign area.

   b. The Township Zoning Hearing Board may grant a special exception to allow larger signs or greater than the prescribed total sign area, or a greater number of signs per street frontage in accordance with Section 225-502.11.

3. Number of signs allowed. The allowable number of signs shall not exceed two per street frontage, except that signs exempted from permit requirements in § 225-403.5401.4.C, window signs less than 2 square feet, and information signs shall not be counted in calculating the number of allowable signs.

4. Location of signs. No sign shall be located within two feet of a side yard area as defined by this Chapter. A ground sign shall be erected such that all parts of the sign are at least 10 feet from the adjacent street right-of-way line, or on the building side of the sidewalk, whichever is closest to the street.

5. Materials, illumination, color and shape.

   a. Signs shall not utilize reflectorized background or letters or figures.

   b. Signs and supporting structures shall be constructed of wood, metal, brick, stone, high-density urethane sign board having a minimum density of 10 pounds per cubic foot, glass, or a combination of these materials. High-density urethane sign board shall only be used when the material is finished with paint or a similar decorative finish such as gold or silver leaf.

   c. Signs and supporting structure materials and colors shall be compatible with the buildings and other signs on the premises.

   d. Sign supporting structures shall be only one color.

   e. Signs shall be illuminated only by a white, steady and stationary external light of reasonable intensity directed at the sign, without causing glare for motorists, pedestrians or neighboring properties. Awnings may only be externally illuminated.

§225-403.5401.4.G. Highwall Sign.

Within the Planned Campus West Future Development Overlay, Planned Campus North, General Commercial, Derry Road Overlay, Downtown Core Overlay and Southern Core OverlayZoning Districts, highwall signs are permitted as a conditional use in accordance with the requirements of Section 225-501.55

Within the 322/422 Zoning Overlay, the Planned Campus West Zoning Overlay, Planned Campus North, General Commercial, Business Office, and Hershey Mixed Use Districts, highwall signs are permitted as a conditional use in accordance with the requirements of 225-501.55

§225-403.5401.4.G.1. Landmark Sign. Landmark Sign.

To promote innovation in signage for lots within the Downtown Core Sign Zoning Overlay District, a landmark sign may be constructed as a conditional use in accordance with Section 225-501.56.

§225-403.5401.4.H. Neighborhood Identification Signs. (Reserved)

Neighborhood identification signs may be erected in all sign overlay districts, provided the following requirements are met.

A. One neighborhood identification sign shall be permitted at each entrance to the neighborhood from a public street on the peripheral boundaries of the development. No more than two neighborhood identification signs shall be permitted along the same street frontage.

B. Maintenance and repair of the sign shall be the responsibility of the Homeowners Association or Property Management company of the development.

C. The sign area of the neighborhood identification sign shall not exceed 24 square feet, per sign. Maximum sign height shall be eight feet, with a maximum vertical and horizontal sign face dimension of eight feet.

D. Neighborhood identification signs shall meet the material, illumination, color and shape requirements of §225-403.5401.4.F.D.5.

E. Neighborhood identification signs shall only indicate the name of the development with no other advertising being permitted.

F. Neighborhood identification signs shall not be permitted at any entrances where a multi-use identification sign is constructed to advertise a commercial shopping and retail area of the development neighborhood.

§225-403.5401.4.I. Nonconforming Signs.

Except for changes to bring an existing nonconforming sign into full conformance with this Chapter, a sign in any sign district cannot be enlarged, extended, relocated, structurally reconstructed or altered.

§225-403.5401.4.J. Commercial Entertainment Identification Signs.

Commercial entertainment identification signs may be erected in the Hersheypark Overlay, provided the following requirements are met. Such signs are not subject to the provisions of

Article ___ of this Chapter except to the extent that certain provisions of Article ___ may be specifically repeated in this section.

A. Commercial entertainment identification signs shall have a maximum width of 42 feet and a maximum height of 42 feet.

B. The sign area of commercial entertainment identification signs shall not exceed 1,000 square feet per sign area. Commercial entertainment identification signs shall be considered to be single-faced signs for the purpose of calculating the sign area.

C. The minimum lot area on which a commercial entertainment identification sign may be erected is 100 acres.

D. Only one commercial entertainment identification sign may be erected on a lot. Any signs on the lot which have been erected or displayed prior to the effective date of this section shall not be classified as a commercial entertainment identification sign.

E. Commercial entertainment identification signs shall be located a minimum of 15 feet from any property line or public street right-of-way, whichever is closer to the sign.

F. Signs shall not be located in such a manner as to obstruct free and clear vision necessary for traffic safety at any street or driveway intersection.

G. Commercial entertainment identification signs may contain one or more LED display screens.

§225-401402. Parking.

§225-401402.1. Vehicular Off-street Parking Standards

A. Off-street parking, loading and unloading space with vehicular access to a street shall be provided in accordance with the following minimum standards on any lot on which any use is established subsequent to the effective date of this Chapter. Meeting these minimum standards shall not relieve the owner of any lot on which any use is established subsequent to the effective date of this Chapter from providing sufficient off-street parking, loading and unloading areas on the lot on which a use is established as necessary to address the off-street parking, loading and unloading needs of the use.

B. Uses established subsequent to the effective date of this Chapter which do not provide adequate off-street parking, loading and unloading areas designed in accordance with §225-401402.2 to meet the demands of the use shall remedy the situation by either providing such areas, if possible, or limiting the use to the extent that the off-street parking, loading and unloading area demands are met on the lot on which the use is located, or by another method enabled by this Chapter.

C. The Zoning Officer shall notify owners of property on which any use is established subsequent to the effective date of this Chapter which does not address the off-street parking, loading and unloading needs of the use on the site of the use, that the deficiency shall be cured. In addition to the enforcement remedies set forth in §225-1008, the Zoning Officer shall declare the use a nuisance and revoke the certificate of occupancy for the use if the deficiency is not corrected within 30 days.

D. Construction vehicles such as backhoes, front-end loaders, etc., trucks having a gross weight exceeding 9,000 pounds and trailers other than recreation trailers which are addressed in §225-405___ shall not be parked or stored on public streets or any outdoor area located in the R-1, R-2, R-3, HMU, PMU, or PCW zoning districts except when such vehicle or trailer is involved in construction on the parcel of land on which it is parked or stored, or when such

vehicle is temporarily parked for the purpose of delivery or pick-up on or adjacent to the parcel of land on which the delivery or pick-up is being made.

E. Off-street parking spaces prescribed by this Chapter shall be located on the same lot as the use which necessitates such spaces, unless the required number of spaces, or a portion thereof, is provided on another lot having a grade separated crossing or a legal, licensed means of mass transportation provided by the applicant to permit pedestrian access to and from the off-lot parking area to the use and it can be demonstrated that such off-lot spaces will not be used by another use at the same time. If the vehicle parking spaces required cannot be provided on the same lot in accordance with this section, the Township Zoning Hearing Board may, as a special exception, permit such spaces to be provided on another lot if it can be demonstrated that such off-lot spaces are located such that they are solely to be utilized by vehicles associated with the use and persons can safely migrate from the parking spaces to and from the use. Such off-lot spaces shall not thereafter be reduced or encroached upon in any manner. The same off-lot space may not be claimed by more than one user for use at the same time. When off-site spaces are established, there shall be a recorded agreement documenting such condition. The Township of Derry shall be a party to the Agreement to ensure that spaces are not diminished in the future. This shall not apply to uses utilizing shared parking as permitted by this Chapter.

F. Also, see §§225-190 and 225-415 relating to outdoor storage of certain vehicles.

G. Off-street parking spaces and loading/unloading areas shall not be used for other purposes, such as special events or the display of merchandise exceeding a 48 hour period, unless the use for which such off-street parking or loading/unloading areas had been provided is not in operation. If parking spaces or loading/unloading areas exist which are surplus to the number of spaces required for a given use, the surplus spaces may be used for other conforming activities, if the activities do not adversely affect the use of the required spaces or loading/unloading areas.

H. Parking for Special Events. Special events, such as sport games or tournaments, carnivals, conventions and the like, in excess of 48 hours, shall not be conducted unless adequate temporary or permanent off-street parking facilities located on other than public streets are provided. Promoters of such events shall advise the Zoning Officer of the anticipated parking demand and the proposal to address the parking needs at least 30 days prior to the special event. The Zoning Officer shall not authorize the special event to be conducted if the parking needs cannot be provided at a location other than a public street and at a location or locations which can be safely used by patrons of the special event.

I. Landscaping. See also §225-403.2.

§225-401402.2. Design and Construction Standards.

A. Lots containing 50 spaces or less may have up to 5030% compact spaces. Lots containing over 50 spaces may have up to 20% compact spaces by right, and up to 40% compact spaces available by Conditional Usespecial exception.[CWE9] See also the Derry Township Building Code regarding the design and quantity of accessible parking spaces. Dimensions associated with parking spaces and maneuvering aisles shall be as follows:

Table 345: Parking Dimensions[BW10]

PARKING DIMENSIONS: FULL SIZE SPACES				
Angle of Parking (degrees)	Width of Parking Space (feet)	Depth of Parking Space (feet)	Width of Maneuvering Aisle* - 1-way (feet)	Width of Maneuvering Aisle* - 2-way (feet)
61-90	9	18	24	24
46-60	9	18	18	20
45	9	18	15	20
Parallel	8	22	12	20 if 4'

PARKING DIMENSIONS: COMPACT SIZE SPACES				
Angel of Parking (degrees)	Width of Parking Space (feet)	Depth of Parking Space (feet)	Width of Maneuvering Aisle* - 1-way (feet)	Width of Maneuvering Aisle* - 2-way (feet)
61 to 90	8	16	24~~2~~	24~~2~~
46 to 60	8	16	18	20~~18~~
45	8	16	15	20~~18~~
Parallel	8	16	12	20~~18~~

B. Provisions should be made within an area of designated parking and loading/unloading areas for vehicles to turn around as necessary to enter the public street in a forward direction. This requirement shall not apply to one and two family dwellings, townhouses, and other residential uses containing a garage.

C. Parking facilities, driving lanes, access drives and areas for loading and unloading shall, at a minimum, be a structurally suitable, all-weather, dust free surface. Parking spaces shall be delineated by contrasting color demarcation on the ground plane having a minimum width of four inches. This subsection shall not apply to individual parking facilities for single-family detached dwellings.

D. Access drives shall have a minimum width of 24 feet, if two-way traffic is to be permitted, and shall have a minimum width of 12 feet if only one-way traffic is to be permitted and no tractor-trailer traffic will use the access drive. If tractor-trailer traffic is anticipated, a minimum access drive width of 18 feet shall be provided, and appropriate curve radii shall be provided to accommodate such traffic.

E. Access drives shall meet the adjacent public street at a 90 degree angle within 15 feet of the edge of the street, unless it can be demonstrated that a lesser angle would significantly contribute to the efficiency and safety of traffic movements to and from the site.

F. Parking facilities driving lanes, access drives and loading and unloading areas for all nonresidential uses which are established after the adoption of this Chapter, shall be located a minimum of 35 feet from any dwelling unit on an adjacent property, or 25 feet from any adjacent property located in the Conservation, R-1, R-2, R-3, HMU, PCW and PMU Districts, whichever distance is greater. The isolation distances referenced in this section may be reduced down to as low as 5 feet if nonresidential buffers are established immediately adjacent to an area of designated parking and loading and unloading area pursuant to Section 225-403~~2~~.1.

G. See §225-402 for regulations regarding parking space locations in yard areas.

H. Parking structures, being part of a multilevel structure, shall meet the design and construction standards of this section, except landscaping requirements shall not apply.

§225-401402.3. Parking Spaces and Accessibility for Persons with Disabilities.

A. Parking spaces for persons with disabilities shall be provided in accordance with the Township Building Code.

B. Parking spaces for persons with disabilities shall be identified by signs indicating that the spaces are reserved for persons with disabilities. These signs shall not be counted when determining the total sign area, number of sign types, number of signs under the provisions of §225-403401.4, if each sign does not exceed three square feet in area, and does contain any advertising value.

§225-401402.4. Shared Parking.

A. Purpose. It is the intent of this section that all structures and land uses be provided with a sufficient number of motor vehicle parking spaces, while minimizing impervious surfaces and allowing flexibility of site design to accommodate unique characteristics of individual properties and areas.

A.B. By-Right use. Cumulative parking requirements for a mixed-use district may be reduced where it can be determined that the peak requirements of the several uses on a single lot occur at different times in accordance with the Shared Parking Demand Chart appended to this article(Appendix B.1 & B.2). The Shared Parking Demand Chart Paid parking and time-limited parking may be included in shared parking.

B.C. Conditional use. The Township Board of Supervisors may permit shared parking as a conditional use for sharing land uses in anyover several lots within a Master Plan Development area and/or in the Downtown Core Overlay. The purpose of shared parking is to minimize the land area dedicated to parking, thereby freeing up scarce land for economically and publicly beneficial activities. The conditions for this type of shared parking are set forth in §225-501.42

§225-401402.5. Vehicular Parking Ratios

A. Minimum off-street parking requirements are as follows:

Table 356: Parking Ratios (Reserved.)

USE	MINIMUM PARKING REQUIRED
Residential Uses	
Single-family Detached Dwelling	2 per dwelling unit
Single-family Semidetached Dwelling	2 per dwelling unit
Single-family Attached Dwelling (Townhouse)	2 per dwelling unit, plus 1 per 5 dwelling units for guest parking
Single Family Conversion	2 per dwelling unit
Two-family Detached Dwelling	2 per dwelling unit
Multifamily Apartment Dwellings (2 BR or more)	2 per dwelling unit, plus 1 per 5 dwelling units for guest parking
Multifamily Apartment Dwellings (1 BR)	1 per dwelling unit, plus 1 per 5 dwelling units for guest parking
Accessory Dwelling Units	1 per dwelling unit
Bed and Breakfast Home	1 per guest room plus 2 spaces per permanent residence
Boarding Home	1 per guest room plus 2 spaces per permanent residence
Dwellings for Employees & Students	1 per guest room or dwelling unit, as may be applicable
Farm Home Occupation	See §225-402.5.B
Family Child Care Home	4 per dwelling unit
Mobile Home Park	2 per dwelling unit
Private Community Facilities/Recreation Areas	See §225-402.5.B
Commercial Uses	
Auction Houses	The greater of 1 per 2 seats or 1 per 50 square feet of public auction area.
Automobile and Truck Leasing/Rental	1 per 2,500 square feet of office and indoor and outdoor display area
Automotive Car Wash/Lubrication Facilities	2 per each service bay plus 1 per employee
Bakery, Retail	In the Downtown Core overlay district, 1 per each 300 square feet of gross floor area. In all other districts, 1 parking space for each 200 square feet of gross floor area.
Business and Professional Offices	In the Downtown Core overlay district, 1 per each 300 square feet of gross floor area. In all other districts, 1 parking space for each 200 square feet of gross floor area.
Campgrounds	1 per campsite or cabin, plus 1 space for each employee on maximum shift
Cigar, Hookah, and/or Vapor Lounge	1 per each 80 square feet of gross floor area
Commercial Laundry	1 space per employee on maximum shift
Commercial Parking Lot or Structure	N/A
Communications Antenna, Building-mounted/Utility-mountyed	N/A
Communications Antenna, Towers ≤ 50 feet in height	N/A
Communications Antenna, Towers > 50 feet in height	N/A
Communications Antenna, Co-located	N/A

USE	MINIMUM PARKING REQUIRED
Residential Uses	
Single-family Detached Dwelling	2 per dwelling unit
Single-family Semidetached Dwelling	2 per dwelling unit
Single-family Attached Dwelling (Townhouse)	2 per dwelling unit, plus 1 per 5 dwelling units for guest parking
Single Family Conversion	2 per dwelling unit
Two-family Detached Dwelling	2 per dwelling unit
Multifamily Apartment Dwellings (2 BR or more)	2 per dwelling unit, plus 1 per 5 dwelling units for guest parking
Multifamily Apartment Dwellings (1 BR)	1 per dwelling unit, plus 1 per 5 dwelling units for guest parking
Accessory Dwelling Units	1 per dwelling unit
Bed and Breakfast Home	1 per guest room plus 2 spaces per permanent residence
Boarding Home	1 per guest room plus 2 spaces per permanent residence
Dwellings for Employees & Students	1 per guest room or dwelling unit, as may be applicable
Farm Home Occupation	See §225-401.5.B
Family Child Care Home	4 per dwelling unit
Mobile Home Park	2 per dwelling unit
Private Community Facilities/Recreation Areas	See §225-401.5.B
Commercial Uses	
Auction Houses	The greater of 1 per 2 seats or 1 per 50 square feet of public auction area.
Automobile and Truck Leasing/Rental	1 per 2,500 square feet of office and indoor and outdoor display area
Automotive Car Wash/Lubrication Facilities	2 per each service bay plus 1 per employee
Bakery, Retail	In the Downtown Core overlay district, 1 per each 300 square feet of gross floor area. In all other districts, 1 parking space for each 200 square feet of gross floor area.
Business and Professional Offices	In the Downtown Core overlay district, 1 per each 300 square feet of gross floor area. In all other districts, 1 parking space for each 200 square feet of gross floor area.
Campgrounds	1 per campsite or cabin, plus 1 space for each employee on maximum shift
Cigar, Hookah, and/or Vapor Lounge	1 per each 80 square feet of gross floor area
Commercial Laundry	1 space per employee on maximum shift
Commercial Parking Lot or Structure	N/A
Communications Antenna, Building-mounted	N/A
Communications Antenna, Towers ≤ 50 feet in height	N/A
Communications Antenna, Towers > 50 feet in height	N/A
Communications Antenna, Co-located	N/A

USE	MINIMUM PARKING REQUIRED
Conference & Meeting Centers	1 per every 250 square feet in the main assembly area, plus 1 per every 4 seats in other indivudal meeting rooms plus parking according to this section for any accessory use that may operate at the same time, such as food service open to the public.
Dry Cleaning Service, Retail	1 per each 200 square feet of gross floor area
Financial Institutions	In the Downtown Core overlay district, 1 per each 300 square feet of gross floor area. In all other districts, 1 parking space for each 200 square feet of gross floor area.
Food Catering	1 space per employee on maximum shift, plus 1 per every 3 seats
Food Services Without Drive-Thru	1 per every 3 seats indoor, plus 1 per every 6 seats outdoor
Food Services With Drive-Thru	1 per every 3 seats indoor, plus 1 per every 6 seats outdoor
Fuel Service - Minor	1 per 2 pumps plus 1 per 200 square feet of retail plus 1 per 4 seats when food service is provided
Fuel Service - Major	1 per 2 pumps, plus 1 per 200 square feet of retail, plus 1 per 4 seats when food service is provided
Funeral Homes	the greater of 1 per 4 seats or 1 per 150 square feet of assembly area, plus 1 space per employee
Healthcare Practitioners Office	3 for each professional who typically sees patients, plus 1 for each professional or employee who typically does not see patients
Heliport	2 per helicopter based at the facility
Hotels and Motels, Residence Hotels and Motels, Guest Lodging, Dining and Conference Facilities	1 per guest room without a kitchenette, plus 1.5 per guest room with a kitchenette, plus 0.75 for each employee on maximum shift, plus 65% of the calculated spaces required for uses such as but not limited to, auditorium, individual conference and/or meeting space/rooms, food service, retail areas, and spas that serve as accessory to the principal use.
Horse Riding Stables & Facilities, No Horse Racing	1 per 3 stalls
Kennel	1 space per employee on maximum shift and 1 per every 10 animals boarded
Landscape and Garden Service - non-retail	1 space per employee at maximum shift, plus 1 per business vehicle
Landscaping and Garden Center - retail	In the Downtown Core overlay zoning district, 1 per each 300 square feet of gross floor area. In all other districts, 1 per each 200 square feet of gross floor area, plus 1 per 500 square feet of outdoor display area.
Laundromat	1 per 3 washing machines
Membership Club	1 per every 3 seats in assembly area
Micro-distilleries/Breweries	1 per employee on maximum shift, plus parking for any food service use on the property, plus one per 300 square feet of retail space if in excess of 300 square feet.
Motor Vehicle Fuel, Wholesale	1 per employee on maximum shift
Motor Vehicle Repair Garages	3 per each service bay, plus 1 per employee at maximum shift
Motor Vehicle Sales and Service	1 per every 2,500 square feet of office and indoor and outdoor sales display area.

USE	MINIMUM PARKING REQUIRED
Conference & Meeting Centers	1 per every 250 square feet in the main assembly area, plus 1 per every 4 seats in other indivudal meeting rooms plus parking according to this section for any accessory use that may operate at the same time, such as food service open to the public.
Dry Cleaning Service, Retail	1 per each 200 square feet of gross floor area
Financial Institutions	In the Downtown Core overlay district, 1 per each 300 square feet of gross floor area. In all other districts, 1 parking space for each 200 square feet of gross floor area.
Food Catering	1 space per employee on maximum shift, plus 1 per every 3 seats
Food Services Without Drive-Thru	1 per every 3 seats indoor, plus 1 per every 6 seats outdoor
Food Services With Drive-Thru	1 per every 3 seats indoor, plus 1 per every 6 seats outdoor
Fuel Service - Minor	1 per 2 pumps plus 1 per 200 square feet of retail plus 1 per 4 seats when food service is provided
Fuel Service - Major	1 per 2 pumps, plus 1 per 200 square feet of retail, plus 1 per 4 seats when food service is provided
Funeral Homes	the greater of 1 per 4 seats or 1 per 150 square feet of assembly area, plus 1 space per employee
Healthcare Practitioners Office	3 for each professional who typically sees patients, plus 1 for each professional or employee who typically does not see patients
Heliport	2 per helicopter based at the facility
Hotels and Motels, Residence Hotels and Motels, Guest Lodging, Dining and Conference Facilities	1 per guest room without a kitchenette, plus 1.5 per guest room with a kitchenette, plus 0.75 for each employee on maximum shift, plus 65% of the calculated spaces required for uses such as but not limited to, auditorium, individual conference and/or meeting space/rooms, food service, retail areas, and spas that serve as accessory to the principal use.
Horse Riding Stables & Facilities, No Horse Racing	1 per 3 stalls
Kennel	1 space per employee on maximum shift and 1 per every 10 animals boarded
Landscape and Garden Service - non-retail	1 space per employee at maximum shift, plus 1 per business vehicle
Landscaping and Garden Center - retail	In the Downtown Core overlay zoning district, 1 per each 300 square feet of gross floor area. In all other districts, 1 per each 200 square feet of gross floor area, plus 1 per 500 square feet of outdoor display area.
Laundromat	1 per 3 washing machines
Membership Club	1 per every 3 seats in assembly area
Micro-distilleries/Breweries/micro-breweries	1 per employee on maximum shift, plus parking for any food service use on the property, plus one per 300 square feet of retail space if in excess of 300 square feet.
Motor Vehicle Fuel, Wholesale	1 per employee on maximum shift
Motor Vehicle Repair Garages	3 per each service bay, plus 1 per employee at maximum shift
Motor Vehicle Sales and Service	1 per every 2,500 square feet of office and indoor and outdoor sales display area.

USE	MINIMUM PARKING REQUIRED
Mixed Use Building	See applicable uses, shared parking may apply per §225-401.4
Outpatient Medical Treatment Facilities	3 for each professional who typically sees patients, plus 1 for each professional or employee who typically does not see patients
Personal Service Establishments	3 for each professional who typically sees clients, plus 1 for each professional or employee who typically does not see clients
Pet Grooming Facilities	3 per each practitioner
Photocopy Service	1 per 200 square feet of gross floor area
Private Parking Lot or Structure	N/A
Recreational, Sports and Entertainment Facilities (Private)	
Amusement, Theme, Entertainment or Water Parks	See §225-401.5.B
Amusement Arcades	1 per each 80 square feet of gross floor area
Arboretums & Botanical Gardens	See §225-401.5.B
Archery & Shooting Ranges, Indoor	1 per shooting stall plus 1 per employee on maximum shift
Archery & Shooting Ranges, Outdoor	1 per shooting station/target area plus 1 per employee on maximum shift
Bowling Alleys	2 per each alley, plus 1 per 2 employees, plus additional parking for the maximum number of patrons permissible at parties, tournaments and other special events shall be provided, where offered, at a ratio of 1 space per 2 guests in addition to the base parking requirements.
Casinos & Gambling Facilities	See §225-401.5.B and §225-501.25
Country Club	See §225-401.5.B
Exercise & Fitness Centers	See §225-401.5.B
Golf Courses (Conventional & Special)	2 per tee plus 1 for every employee on maximum shift
Recreation Facilities for Employees, Faculty & Students	See §225-401.5.B
Sporting and Entertainment Arenas & Stadiums	See §225-401.5.B
Sport & Field Complexes	See §225-401.5.B
Zoos	See §225-401.5.B
Rental and Leasing Businesses	1 per each 500 square feet of indoor or outdoor display area, plus 1 per employee on largest shift
Research/Technology Business Incubator	1 per each 200 square feet of gross floor area.
Residence Hotels and Motels	See Hotels and motels, residence hotels and motels, Guest Lodging, Dining and Conference Facilities
Retail, Large-Scale	In the Downtown Core overlay district, 1 per each 300 square feet of gross floor area. In all other districts, 1 per each 200 square feet of gross floor area. Shared parking may apply.
Retail, Small-Scale	In the Downtown Core overlay district, 1 per each 300 square feet of gross floor area. In all other districts, 1 per each 200 square feet of gross floor area. Shared parking may apply.
Service and Repair of Lawn Maintenance Equipment and Small Engine Repair	1 per each 400 square feet of gross floor area
Service and Repair Facilities	1 per each 400 square feet of gross floor area
Sexually Oriented Businesses	See §225-401.5.B
Specialty Home	1 per bedroom, plus one additional space

USE	MINIMUM PARKING REQUIRED
Mixed Use Building	See applicable uses, shared parking may apply per §225-402.4
Outpatient Medical Treatment Facilities	3 for each professional who typically sees patients, plus 1 for each professional or employee who typically does not see patients
Personal Service Establishments	3 for each professional who typically sees clients, plus 1 for each professional or employee who typically does not see clients
Pet Grooming Facilities	3 per each practitioner
Photocopy Service	1 per 200 square feet of gross floor area
Private Parking Lot or Structure	N/A
Recreational, Sports and Entertainment Facilities (Private)	
Amusement, Theme, Entertainment or Water Parks	See §225-402.5.B
Amusement Arcades	1 per each 80 square feet of gross floor area
Botanical Gardens	See §225-402.5.B
Archery & Shooting Ranges, Indoor	1 per shooting stall plus 1 per employee on maximum shift
Archery & Shooting Ranges, Outdoor	1 per shooting station/target area plus 1 per employee on maximum shift
Bowling Alleys	2 per each alley, plus 1 per 2 employees, plus additional parking for the maximum number of patrons permissible at parties, tournaments and other special events shall be provided, where offered, at a ratio of 1 space per 2 guests in addition to the base parking requirements
Casinos & Gambling Facilities	See §225-402.5.B and §225-501.25
Country Club	See §225-402.5.B
Exercise & Fitness Centers	See §225-402.5.B
Golf Courses (Conventional & Special)	2 per tee plus 1 for every employee on maximum shift
Recreation Facilities for Employees, Faculty & Students	See §225-402.5.B
Sporting and Entertainment Arenas & Stadiums	See §225-402.5.B
Sport & Field Complexes	See §225-402.5.B
Zoos	See §225-402.5.B
Rental and Leasing Businesses	1 per each 500 square feet of indoor or outdoor display area, plus 1 per employee on largest shift
Research/Technology Business Incubator	1 per each 200 square feet of gross floor area.
Residence Hotels and Motels	See Hotels and motels, residence hotels and motels, Guest Lodging, Dining and Conference Facilities
Retail, Large-Scale	In the Downtown Core overlay district, 1 per each 300 square feet of gross floor area. In all other districts, 1 per each 200 square feet of gross floor area. Shared parking may apply.
Retail, Small-Scale	In the Downtown Core overlay district, 1 per each 300 square feet of gross floor area. In all other districts, 1 per each 200 square feet of gross floor area. Shared parking may apply.
Service and Repair of Lawn Maintenance Equipment and Small Engine Repair	1 per each 400 square feet of gross floor area
Service and Repair Facilities	1 per each 400 square feet of gross floor area
Sexually Oriented Businesses	See §225-402.5.B
Specialty Home	1 per bedroom, plus one additional space

USE	MINIMUM PARKING REQUIRED
Studios/Gallery for Teaching, Dancing, Art, Music or Similar Cultural Pursuits	1 per instructor, plus 1 space for each 2 students, plus area for safe and convenient loading/unloading of students
Taxidermy	Minimum of 2 spaces or 1 per employee on maximum shift, whichever is greater
Theater and Auditorium	1 per each 3 seats
Veterinary Office	3 for each professional who typically sees patients, 1 for each professional or other employee who typically does not see patients
Veterinary Hospital	3 for each exam room, plus 1 for each employee on the largest shift.
Visitor Center	1 per 300 square feet of gross floor area
Winery	1 per employee on maximum shift, plus 1 per 3 seats in each tasting room, plus 75% of spaces required for accessory uses on the site such as assembly areas, food service, retail areas.
Industrial Uses	
Assembling	1 per employee on maximum shift
Production Bakery	1 per employee on maximum shift
Commercial/Industrial Laundering and Dry-Cleaning Facilities	1 per employee on maximum shift
Grain Milling	1 per employee on maximum shift
Importing & Exporting Establishments	1 per employee on maximum shift
Industrial Equipment Sales & Repair	The greater of 1.25 per employee on maximum shift or 1 per 500 square feet of indoor and outdoor display area.
Laboratories	1 per employee on maximum shift
Machine Shop	1 per employee on maximum shift
Manufacturing	1 per employee on maximum shift
Mineral Extraction	1 per employee on maximum shift
Printing and Publishing	1 per employee on maximum shift
Processing	1 per employee on maximum shift
Self-storage facilities	1 per every 5 storage units
Solid, Liquid or Gas Fuel Dealers	1 per employee on maximum shift
Solid or Liquid Waste Transfer Stations	1 per employee on maximum shift
Storage, Including Fuel Storage	1 per employee on maximum shift
Truck Terminals	1 per employee on maximum shift
Waste Management Facilities	1 per employee on maximum shift
Warehousing	1 per employee on maximum shift
Welding Shop	1 per employee on maximum shift
Wholesale Trade Establishments	1 per employee on maximum shift
Wood Millworks	1 per employee on maximum shift
Institutional Uses	
Life Care Facilities	1 per every institutional dwelling unit, plus 1 per each employee and volunteer on maximum shift - See §225-501.34
Group Child Care Facilities	1 per every 10 children, plus 1 per each employee and volunteer on maximum shift
Group Home for Persons with Disabilities	1 per every 4 beds, plus 1 per each employee and volunteer on maximum shift
Group Home for Persons without Disabilities	1 per every 1 beds, plus 1 per each employee or volunteer on maximum shift
Hospital	1 per bed, plus 1 per each employee on maximum shift, plus 3 per professional seeing outpatients

USE	MINIMUM PARKING REQUIRED
Studios/Gallery for Teaching, Dancing, Art, Music or Similar Cultural Pursuits	1 per instructor, plus 1 space for each 2 students, plus area for safe and convenient loading/unloading of students
Taxidermy	Minimum of 2 spaces or 1 per employee on maximum shift, whichever is greater
Theater and Auditorium	1 per each 3 seats
Veterinary Office	3 for each professional who typically sees patients, 1 for each professional or other employee who typically does not see patients
Veterinary Hospital	3 for each exam room, plus 1 for each employee on the largest shift.
Visitor Center	1 per 300 square feet of gross floor area
Winery	1 per employee on maximum shift, plus 1 per 3 seats in each tasting room, plus 75% of spaces required for accessory uses on the site such as assembly areas, food service, retail areas.
Industrial Uses	
Assembling	1 per employee on maximum shift
Production Bakery	1 per employee on maximum shift
Commercial/Industrial Laundering and Dry-Cleaning Facilities	1 per employee on maximum shift
Crematory	1 per employee on maximum shift
Grain Milling	1 per employee on maximum shift
Importing & Exporting Establishments	1 per employee on maximum shift
Industrial Equipment Sales & Repair	The greater of 1.25 per employee on maximum shift or 1 per 500 square feet of indoor and outdoor display area.
Laboratories	1 per employee on maximum shift
Machine Shop	1 per employee on maximum shift
Manufacturing	1 per employee on maximum shift
Mineral Extraction	1 per employee on maximum shift
Printing and Publishing	1 per employee on maximum shift
Processing	1 per employee on maximum shift
Self-storage facilities	1 per every 5 storage units
Solid, Liquid or Gas Fuel Dealers	1 per employee on maximum shift
Solid or Liquid Waste Transfer Stations	1 per employee on maximum shift
Storage, Including Fuel Storage	1 per employee on maximum shift
Truck Terminals	1 per employee on maximum shift
Waste Management Facilities	1 per employee on maximum shift
Warehousing	1 per employee on maximum shift
Welding Shop	1 per employee on maximum shift
Wholesale Trade Establishments	1 per employee on maximum shift
Wood Millworks	1 per employee on maximum shift
Institutional Uses	
Life Care Facilities	1 per every institutional dwelling unit, plus 1 per each employee and volunteer on maximum shift - See §225-501.34
Group Child Care Facilities	1 per every 10 children, plus 1 per each employee and volunteer on maximum shift
Group Home for Persons with Disabilities	1 per every 4 beds, plus 1 per each employee and volunteer on maximum shift
Group Home for Persons without Disabilities	1 per every 1 beds, plus 1 per each employee or volunteer on maximum shift
Hospital	1 per bed, plus 1 per each employee on maximum shift, plus 3 per professional seeing outpatients

USE	MINIMUM PARKING REQUIRED
Incinerators and Crematoriums (for On-Site Generated Medical Wastes)	1 per employee on maximum shift
Medical-related Research Facilities	1 per employee on maximum shift
Museums	1 per every 200 square feet of exhibit area
Other Scientific Research, Development and Training Facilities	See §225-402.5.B
Place of Worship/Place of Assembly	1 per every 3 fixed seats in main assembly area or, when fixed seating is not provided, 1 per every 50 square feet of seating area, plus parking for any accessory use that may operate at the same time as a service. If the same facility includes another principal use, parking shall be provided in accordance with the use needing the highest demand.
Prisons	1 per employee on maximum shift, plus 1 space for every 2 seats in visitor room
Schools - Day care to grade 9	The greater of 1 per 6 students or 1 per every 3 seats in the largest assembly area
Schools - Grades 10-12	The greater of 1 per 3 students or 1 per every 3 seats in the largest assembly area or sports field seating area on the same campus
Schools - Colleges with on-site dormitories	1 per 2 students, plus 1 per each employee on maximum shift, plus 75% parking for accessory uses, such as theater and auditorium spaces, stadiums and any other assembly areas open to the public
Schools - Colleges without on-site dormitories	1 per student, plus 1 per each employee on maximum shift
Skilled Nursing	1 per every 2 beds, plus 1 per each employee or volunteer on maximum shift - See §225-501.34
Municipal/Public Uses	
Administrative Offices of County, State or Federal Government (Office)	1 per every 200 square feet of gross floor area, plus 1 space for every 4 seats in assembly areas
Libraries	1 per every 200 square feet of gross floor area
Municipal Buildings and Uses	1 per every 200 square feet of gross floor area
Fire/Emergency Services	See §225-402.5.B
Parks, Playgrounds & Recreation	See §225-402.5.B
Utility Service Structures	See §225-402.5.B
Utility Buildings	1 per structure
Recycling of Paper, Glass, and Metal Products	1 per employee on maximum shift
Sewage Treatment Plants	1 per employee on maximum shift
Agricultural/Conservation Uses	
Agricultural Uses	N/A
Cemeteries	See §225-402.5.B
Conservation Areas & Uses	See §225-402.5.B
Miscellaneous	
Uses similar to specified permitted uses	See §225-402.5.B
Billboard	N/A

USE	MINIMUM PARKING REQUIRED
Incinerators and Crematoriums for On-Site Generated Medical Wastes	1 per employee on maximum shift
Medical-related Research Facilities	1 per employee on maximum shift
Museums	1 per every 200 square feet of exhibit area
Other Scientific Research, Development and Training Facilities	See §225-401.5.B
Place of Worship/Place of Assembly	1 per every 3 fixed seats in main assembly area or, when fixed seating is not provided, 1 per every 50 square feet of seating area, plus parking for any accessory use that may operate at the same time as a service. If the same facility includes another principal use, parking shall be provided in accordance with the use needing the highest demand.
Prisons	1 per employee on maximum shift, plus 1 space for every 2 seats in visitor room
Schools - Day care to grade 9	The greater of 1 per 6 students or 1 per every 3 seats in the largest assembly area
Schools - Grades 10-12	The greater of 1 per 3 students or 1 per every 3 seats in the largest assembly area or sports field seating area on the same campus
Schools - Colleges with on-site dormitories	1 per 2 students, plus 1 per each employee on maximum shift, plus 75% parking for accessory uses, such as theater and auditorium spaces, stadiums and any other assembly areas open to the public
Schools - Colleges without on-site dormitories	1 per student, plus 1 per each employee on maximum shift
Skilled Nursing	1 per every 2 beds, plus 1 per each employee or volunteer on maximum shift - See §225-501.34
Municipal/Public Uses	
Administrative Offices of County, State or Federal Government (Office)	1 per every 200 square feet of gross floor area, plus 1 space for every 4 seats in assembly areas
Libraries	1 per every 200 square feet of gross floor area
Municipal Buildings and Uses	1 per every 200 square feet of gross floor area
Fire/Emergency Services	See §225-401.5.B
Parks, Playgrounds & Recreation	See §225-401.5.B
Utility Service Structures	See §225-401.5.B
Utility Buildings	1 per structure
Recycling of Paper, Glass, and Metal Products	1 per employee on maximum shift
Sewage Treatment Plants	1 per employee on maximum shift
Agricultural/Conservation Uses	
Agricultural Uses	N/A
Cemeteries	See §225-401.5.B
Conservation Areas & Uses	See §225-401.5.B
Miscellaneous	
Uses similar to specified permitted uses	See §225-401.5.B
Billboard	N/A

Specialty spaces shall be calculated at the following factors	
USE	**FACTOR (1 parking space X factor)**
Spaces used for display of merchandise for sale or lease	0
Spaces used for storage of vehicles associated with the use	0.25
Spaces designed to accommodate tractor trailers	0
Spaces not available for all users during business hours (i.e. employee of the month, electric car charging station, restaurant pick-up only, etc.)	0.5
Spaces designed for persons with disabilities	1
Car service, fuel service, or carwash bays	1
Bus parking (except at schools and casinos)	4
Limousine parking	2
Valet lot space	1
Bicycle space above minimum required, but not exceeding 8 additional bicycle spaces	0.25

B. To determine the minimum number of off-street parking spaces for uses which are not specifically listed in this section, or for uses that have been refered to this section by the minimum parking table above, or for instances where the applicant disputes minimum parking requirements for a particular use, the applicant shall submit a plan to include rationale justifying the number of parking spaces and loading and unloading spaces for the proposed use. The plan should cite information on parking demands, hours of operation, pedestrian access, off-site parking combinations and other variables which would influence the number of parking spaces provided on site. The Zoning Officer shall review and approve the number of parking spaces and loading and unloading spaces prior to land development plan approval, zoning permit approval, or building permit approval, whichever is first required. The applicant may appeal the Zoning Officer's decision to the Derry Township Zoning Hearing Board.

§225-401402.6. Off-Street Loading and Unloading Space.

A. Every use other than residential buildings which involves or is expected to involve the receipt and/or distribution of materials shall provide off-street loading and unloading parking spaces at the minimum rate of one space for every 10,000 20,000 square feet or fraction thereof of gross floor area for nonresidential uses, and one space for every five 20 dwelling units or fraction thereof for residential usesbuildings containing 20 or more dwelling units. Uses of land not involving buildings or structures shall provide a sufficient number of off-street loading and unloading space, to avoid vehicles having to park off-site to service the facility. The size of the off-street loading and unloading space shall be of adequate size to accommodate the type of vehicle which will be loading or unloading. Notwithstanding the other provisions of this section, uses of land in the Palmdale Chocolate Avenue Overlay and the Downtown Core Overlay shall provide a sufficient number of off-street loading and unloading spaces to avoid vehicles having to park off-site to service the use.

B. The size of the off-street loading and unloading space shall be of adequate size to accommodate the type of vehicle which will be loading or unloading. Notwithstanding the foregoing off-street loading and unloading parking space provisions, where hotels or motels are erected after the effective date of this amendment on lots of less than five gross acres, the off-street loading and unloading parking spaces shall be computed based on a minimum

of one space for every 14,000 square feet or fraction thereof of gross floor area for nonresidential uses.

C. To determine the minimum number of off-street loading and unloading spaces for uses which are not specifically listed in this section, or Wwhere the applicant believes that the off-street loading and unloading demands of a proposed use may be accommodated by fewer spaces than the required minimum number of off-street loading and unloading spaces required in this section, the applicant shall submit a plan to include rationale justifying the number of loading and unloading spaces they state are necessary for the proposed use. The plan shall cite information on loading and unloading demands, hours of operation, control of deliveries and shipments, storage of loading and unloading vehicles and other variables which would influence the number of loading and unloading spaces provided on site. The Zoning Officer shall review and approve the number of loading and unloading spaces prior to land development plan approval, zoning permit approval, or building permit approval, whichever is first required. The applicant may appeal the Zoning Officer's decision to the Derry Township Zoning Hearing Board.

C.D. Notwithstanding the other provisions of this section, uses of land in the Palmdale Chocolate Avenue Overlay and the Downtown Core Overlay shall provide a sufficient number of off-street loading and unloading spaces to avoid vehicles having to park off site to service the use.

§225-401402.7. Bicycle Parking Standards

A Bicycle parking facilitiesy for securing a minimum of 2 bicycles shall be provided at a ratio of 2 bicycle spaces per 50 automobile spaces, or fraction thereof, up to a maximum of ten bicycle spaces, any time a non-residential parking facility is created or modified. For the purposes of this requirement, restriping in-kind and resealing parking areas shall not be considered a parking modification.

§225-401402.8. Parking Landscaping Standards

See §225-4032.1 & §225-4032.23 for landscaping requirements in parking areas.

§225-403. Landscaping.

§225-403.1. Nonresidential Use Landscaped Buffer.

A. When a nonresidential use is established which abuts a residential zoning district or a residential use in certain zoning districts as specified by this Chapter, a landscaped buffer having a minimum width as required in 225-403.1.B shall be established on the site of the nonresidential use immediately adjacent to and parallel to the residential use. Within buffer installations, shade trees shall have a minimum trunk diameter of 2 inches as measured 6" above the root collar, evergreen trees shall be at least eight feet tall, and shrubs shall be at least three feet in height. The minimum landscaping requirements are as follows:

1. Class 1, 25' landscape buffer – If natural woodlands exist, they shall be preserved and shall be supplemented with at least 5 evergreen trees and 15 evergreen shrubs per 100 feet of buffer perimeter, if they do not naturally exist.

2. Class 2, 25' landscape buffer - If not wooded, earthen mounds shall be provided that are at least 3 feet high, but not higher than 7 feet with shade trees, evergreen trees and shrubs and deciduous shrubs, or, in the case of the Palmdale Future Development Area Overlay, passive stormwater management areas, shall be created and planted. There shall be at least 2 shade trees per 75 feet of buffer perimeter, 5 evergreen trees per 100 feet of buffer perimeter, and at least 25 shrubs per 100 feet of buffer perimeter, 50% of which shall be evergreen.

3. Class 3, 15' landscape buffer – If ~~not wooded~~natural vegetation meeting the intent of the Ordinance does not exist, earthen mounds shall be provided that are at least 2 feet high, but not higher than 4 feet with at least 2 shade trees per 75 feet of buffer perimeter, 5 evergreen trees per 100 feet of buffer perimeter, and at least 25 shrubs per 100 feet of buffer perimeter, 50% of which shall be evergreen.

4. Class 4, 15' landscape buffer – If not wooded, earthen mounds shall be provided that are at least 2 feet high, but not higher than 4 feet with at least 2 shade trees per 75 feet of buffer perimeter and at least 25 shrubs per 100 feet of buffer perimeter, 50% of which shall be evergreen. In lieu of shrubs, a fence (up to 6' in height) and/or a wall (up to 4' in height) may be utilized.

5. Class 5, 5' landscape buffer – At least 3 shade or ornamental trees per 75 feet of buffer perimeter and at least 15 shrubs per 100 feet of buffer perimeter shall be provided. At least 50% of the shrubs shall be evergreen. In lieu of shrubs, a fence and/or a wall subject to Derry Township Design Standards may be utilized.

6. Class 6, 5' landscape buffer – Walls and/or fences shall be provided subject to Derry Township Design Standards.

B. The following bufferyards shall apply:

1. Class1 or Class 2 landscape buffer; non-residential development (excluding agricultural operations) adjacent to residential development in the Conservation, R-1, R-1 or R-3 Zoning districts.

2. Class1 or Class 2 landscape buffer; along the non-street perimeter of the Medical Campus Zoning District.

3. Class 3 or Class 4 landscape buffer; R-3 Residential adjacent to all other residential development – or - Industrial development adjacent to Commercial development.

4. Class 5 or Class 6 landscape buffer; Parking areas, loading and unloading areas, and new structures for non-residential development adjacent to single family or two family residential uses in the Hershey Mixed Use, Palmdale Mixed Use and Planned Campus West Zoning Districts.

A. In conjunction with the Thoroughfare Overlays designated within this Chapter and to continue the established pattern of community thoroughfares, the following buffer areas are hereby established and shall not be physically disturbed or used for any use, other than agricultural uses, conservation areas and uses for the conservation of open space, water, soil and wildlife resources and landscaping, except as may be necessary to provide ingress, egress and regress to a property or to enable utility placement:

1. One hundred feet north of, and parallel to, the northern right-of-way line of Route 322 and the Route 322/422/39 cloverleaf between the Swatara Creek and East Main Street.

2. One hundred feet south of, and parallel to, the southern right-of-way line of Route 322 between the Swatara Creek and Bullfrog Valley Road.

3. One hundred feet west of, and parallel to, the western right-of-way line of Bullfrog Valley Road between the 322/422/39 cloverleaf and a point 600 feet north of Roush Road.

4. One hundred feet north of, and parallel to, the northern right-of-way line of Wood Road between Bullfrog Valley Road and a point 200 feet east of Middletown Road.

5. One hundred feet south of, and parallel to, the southern right-of-way line of Wood Road between Bullfrog Valley Road and a point 200 feet east of Middletown Road.

6. One hundred feet landward, and parallel to, the normal water line of the Derry Township side of the Swatara Creek or the 100-year floodway line of the Swatara Creek, whichever is the greater distance.

7. One hundred feet south of, and parallel to, the southern right-of-way line of Grove Street.

§225-403~~2~~.2. Parking Lot Landscaping.

A. Other than in the Hersheypark Overlay, which is addressed in 225-~~403~~401.1.E, a minimum of 15% of the parking lot consisting of more than 50 parking spaces shall be maintained as a landscaped area, with at least one canopy tree measuring 2 inch caliper at 6" above the root collar provided for each eight parking spaces or portion thereof.

B. Landscaped front and side yard areas within 10 feet of the parking lot may be included in this calculation so long as a minimum of 8% of the landscape area is located in the interior of the parking lot. Canopy trees along the perimeter shall be spaced evenly to the greatest extent possible, however, canopy trees must be included in the interior landscaping as well.

C. In the Palmdale Chocolate Avenue ~~overlay~~, Derry Road, and Downtown Core overlays, landscaping required by this section is permitted to be placed entirely along the perimeter of areas designated for parking, when located within 10 feet of the parking lot.

H. No person, firm, corporation, partnership or government agency shall erect, place, alter, construct, or cause to be erected, placed, altered, or constructed a commercial entertainment identification sign until a permit authorizing the same has been issued by the Derry Township Administrative Office. The fee for such permit shall be based on the value of the sign as specified in the prevailing Derry Township fee schedule for zoning permits and/or building permits.

§225-404. Keeping of Animals as an Accessory, Noncommercial Use.

A. Domestic pets, as defined herein, shall be permitted in all zoning districts as an accessory use; provided up to a maximum of eight (8) domestic pets shall be permitted per property. Small mammals, such as hamsters or gerbils, small reptiles, and small amphibious animals shall not count against this total. Outdoor pens or other structures housing domestic pets shall meet setback requirements for detached accessory structures for the district in which they are located, unless the structures are less than 50 square feet and placed within a completely fenced in area. The fence shall comply with §225-407.

B. Domestic animals, as defined herein, shall be permitted to kept as an accessory use on all properties located within the Conservation and Campus HeritagePlanned Campus South zoning districts, in accordance with the following regulations:

1. Domestic animals, excluding poultry, which normally weigh less than 200 pounds in an adult state of maturity, shall be kept only on a lot have having a minimum area of one acre per animal.

2. Domestic animals that weigh 200 pounds or more, at an adult state of maturity, shall be kept only on a lot having a minimum area of 1 ½ acres per animal. Common open space areas shall not be considered as lot area for the purposes of this Section.

3. Poultry animals may be kept on a lot having a minimum area of 10,000 square feet per animalbird, up to a maximum of 25 birds.

4. All domestic animals and animal excrement shall be kept at least 50 feet away from property lines, including areas of animal excrement. Animals shall be kept in a fenced enclosure of adequate height to prevent the animal from escaping the property. The fence shall comply with §225-407. Poultry must be kept in a pen or coop to prevent free roaming.

C. Beekeeping shall be permitted as an accessory use in all zoning districts on properties that contain at least one acre in area. The following regulations shall apply:

1. Colonies shall be maintained in moveable frame hives, with hives being no closer than 25 feet to any property line, and at least 50 feet from any dwelling located on an adjoining property.

2. All hives shall have access to an on-site water supply, whether it be a water-filled tank or from a natural water source located on the property.

3. Any beekeeper shall provide documentation that they are in compliance with Pennsylvania's Bee Law, 3 Pa. C.S.A. § 2101-§2117, which requires the owner of an apiary located in Pennsylvania to register the apiary with the Pennsylvania Department of Agriculture.

D. Nondomestic animals, as defined herein, shall be permitted to be kept as an accessory use in all zoning districts, upon special exception approval of the Zoning Hearing Board, and only when the animals have been legally obtained and do or will not exceed a normal adult weight of 25 pounds per animal. The following requirements shall apply:

1. The maximum number of nondomestic animals on a given lot shall be as follows:

Adult Weight of Animal	Square Feet of Lot Area Per Animal
Greater than 15 but no more than 25 lbs.	15,000
Greater than 5 but not more than 15 lbs.	7,500
Greater than 1 but no more than 5 lbs.	2,500
Greater than 6 but not more than 1 lb.	1,000
Greater than 2 oz. but not more than 6 oz.	500
Less than 2 oz.	Unlimited

2. All animals shall be kept at least 25 feet from any property line and no closer than 50 feet to any dwelling located on an adjoining property.

3. Animals shall be kept in a fenced enclosure of adequate height to prevent the animal from escaping the property. The fence shall comply with §225-407. Fowl or other wild birds must be kept in a pen or coop to prevent free roaming.

E. Exclusions. The following uses are excluded from this Section:

1. Agricultural uses keeping domestic animals only.

2. Veterinarian offices, veterinary hospitals and kennels.

3. Zoos

4. Public or Private Conservation Areas

5. The use of a domestic animal or domestic pet as a Service Animal as defined by the Americans with Disabilities Act.

§225-405. Temporary Construction Building or Trailer.

Temporary construction buildings or trailers may be installed on a property during construction of a permanent building or structure, so long as the construction trailer is not used as a dwelling. Temporary construction buildings or trailers shall comply with the provisions of the Township building code and, if located on a site in excess of 180 day it shall be located in accordance with principal building requirements set forth in this Chapter which are applicable to the district in which the property is located. All temporary construction trailers or buildings shall be removed within 14 days of completion of construction of the permanent building or buildings, or within 14 days of the expiration of the zoning and/or building permit for the project, whichever first occurs.

§225-406. Temporary Real Estate Sales Offices.

A temporary real estate sales office may be established within a dwelling unit not occupied for residential purposes in a residential development having more than 10 dwelling units, if the real estate sales office is used only to market the real estate offered within the development. A temporary real estate office shall be removed within 14 days of the sale or lease of the last property in the development.

§225-407. Fences.

A. Fences erected on properties used in whole or in part for residential purposes outside of the Downtown Core Overlay zone are subject to the following restrictions:

1. The maximum height of a fence panel shall be 6 feet (72 inches), except within 10' of a street right-of-way line other than alleys where maximum height is restricted to 3.5 feet (42 inches).

2. No fence shall be erected at such a location as to interfere with minimum sight distance specifications for street intersections and intersections of driveways and streets as established in Chapter **185**, Subdivision and Land Development.

3. Fences of the type commonly identified as chain link fences shall be permitted only when the links, posts, and mounting fixtures are vinyl clad.

4. When erecting nonsymmetrical fences, the finished side of the fence shall be placed to the outside of the property on which the fence is located.

B. Fences erected on properties within the Downtown Core Overlay zone are subject to the following restrictions:

1. The maximum height of a fence panel shall be 6 feet (72 inches), except within 10' of a street right-of-way line other than alleys where maximum height is restricted to 3.5 feet (42 inches).

2. No fence shall be erected at such a location as to interfere with minimum sight distance specifications for street intersections and intersections of driveways and streets as established in Chapter **185**, Subdivision and Land Development.

3. Fences of the type commonly identified as chain link fences shall be permitted only when the links, posts, and mounting fixtures are vinyl clad, and located on side or rear yards.

4. Fences of the type commonly identified as stockade fences shall be permitted when located on in a side or rear yards.

5. When erecting nonsymmetrical fences, the finished side of the fence shall be placed to the outside of the property on which the fence is located.

C. Fence panels erected on properties used for nonresidential purposes outside of the Downtown Core Overlay zone may have a maximum height of 10 feet (120 inches), except in cases where the fence would be located less than 20 feet from a building used in whole or in part for residential purposes, in which case such fence or portion thereof within 20 feet of such residential building shall comply with the requirements for residential fences set forth in Subsection A of this section. No fence shall be erected at such a location as to interfere with minimum sight distance specifications for street intersections and intersections of driveways and streets as established in Chapter 185, Subdivision and Land Development.

D. The bottom of a residential or nonresidential fence panel shall not be erected more than four inches above the surface or ground that supports the fence.

E. Fence posts, including any decorative finials or post caps, shall not extend more than 10 inches from the top of the fence panel that is six feet or greater.

F. The Township Zoning Hearing Board may grant a special exception to erect fence panels on a property used for nonresidential purposes that would have a height of 12 feet (144 inches),

and may grant a special exception to erect fence panels on a property used for residential purposes that would have a height of 10 feet (120 inches), if the applicant can demonstrate to the Board's satisfaction that due to topographical constraints or special needs related to the use of the property in question, fence panels of a greater height than is normally prescribed is necessary. The Board shall also find that fence panels erected to a height greater than prescribed in Subsections A, B, and C of this section will not have a significant negative impact to surrounding properties from an aesthetic or safety standpoint. The Board may attach reasonable conditions such as landscaping requirements or setback requirements when granting such a special exception.

F. §225-408. Reserved.

§225-409. Certain Uses to be Served by Public Water and Sewer.

A. All uses which generate sewage shall be served by public sewer services, and all uses which use potable water shall be served by public water facilities, except that the following uses shall be exempted from this requirement:

1. Single-family detached dwellings located in the Conservation, Planned Campus South, or, R-1 Districts.

2. Parks and playgrounds in any zoning district.

3. Agricultural, horticultural and silvicultural uses in any zoning district.

B. This section shall not be construed to conflict with more stringent regulations set forth in Chapter 185, Subdivision and Land Development, which require certain development activities to be served by public sewer and/or public water facilities.

§225-410. Unenclosed Storage.

A. In any zoning district, the front yard area and/or street right-of-way area shall not be used, temporarily or permanently, for the storage, display, or sales of any materials or for the rendering of any service, except as follows:

1. Garage/yard sales pursuant to §225-**187 414** are permitted in the front yard area.

2. Activities as permitted by Chapter **196**, Transient Retail Business, of the Code of the Township of Derry for transient retail business, soliciting, or peddling licenses issued by the Police Department of the Township of Derry may be allowed within the street right-of-way area.

2. 3. When a street has been legally closed or otherwise restricted for use as an activity, special event or for construction purposes.

B. The outdoor stockpiling or outdoor storage of any material (except firewood used for residential purposes) in rear or side yards shall be subject to detached accessory use or other applicable side or rear yard requirements for the zoning district in which the stockpiling or outdoor storage is proposed. Stockpiled materials shall not include any material strictly prohibited by Subsection C below.

C. The outdoor storage and accumulation of junk, junk vehicle(s) when in excess of 10 days, trash, garbage, or refuse shall be prohibited on any property, except as follows:

1. The storage of regulated solid waste that is temporarily stored in an appropriate container and is routinely awaiting imminent collection and proper disposal, provided that the container is not overflowing or stored in a manner that would promote foul odors to be

detected across property lines, that would harbor scavenging by rodents or other animals, or that would attract flies or other insects to the container;

2. The storage of items routinely awaiting imminent collection for recycling that are temporarily stored in an appropriate container, provided that the container is not overflowing or stored in a manner that would promote foul odors to be detected across property lines, that would harbor scavenging by rodents or other animals, or that would attract flies or other insects to the container;

3. The storage of junk vehicles in an area that is enclosed by a fence, provided that said fence complies with the criteria of §225**-407** and that the stored vehicle is not visible from public right-of-ways or adjoining properties. No more than one junk vehicle shall be permitted to be stored on a residentially used property in a manner that is compliant with this subsection;

4. The storage of a single personal junk vehicle on a residentially used property that is awaiting the making of repairs to said vehicle for the purpose of rendering it operable, provided that the vehicle shall not remain on the premises for such purpose for a period in excess of 90 days.

D. The outdoor storage of recreational activity vehicles or utility vehicles is permitted in accordance with §225-415190.

§225-411. Subsurface or Overhead Buildings or Structures in Yard Areas.

The only subsurface or overhead buildings or structures which shall be permitted in required yard areas are as follows:

A. Public or Private utility lines and vaults.

B. Storm drainage pipes and stormwater management facilities.

C. Vehicle or pedestrian tunnels and bridges and structures necessary for the stability or functioning of these structures when used to facilitate a street crossing or a crossing of a common property line between two properties owned by the same party.

§225-412. Satellite Antennae.

Satellite antennae may be erected subject to the following regulations:

A. In the R-1 and R-2 zoning districts, satellite antennae which are no longer in use, shall be removed within 30 days of termination of services.

B. Satellite antennae may be erected only on or within two feet of the ground level or on or within two feet of the roof level. Ground level and roof level shall be construed to be the highest point of the ground or roof, as may be the case, within a 10 foot radius of the antenna.

C. The maximum diameter of a ground-mounted satellite antenna shall be eight feet.

D. The maximum diameter of a roof-mounted satellite antenna shall be three feet.

E. The maximum supported height of a ground-mounted satellite antenna shall be 12 feet. In the event of a conflict between this criteria and Subsection C B of this section, this criteria shall apply.

F. The maximum supported height of a roof-mounted satellite antenna shall be seven feet. In the event of a conflict between this criteria and Subsection C B of this section, this criteria shall apply.

G. A ground-mounted satellite antenna shall be entirely surrounded by shrubbery at least as high as the antenna, and all of said shrubbery shall be located not more than 15 feet from any point of the antenna.

H. Ground mounted satellite antennae shall not be located within any yard areas required for principal or accessory uses, and shall be located only to the rear of principal buildings.

I. No satellite antenna may be erected in an area which is prohibited by regulations of the Federal Communication Commission or other regulatory agency having jurisdiction.

J. The Township Zoning Hearing Board may grant a special exception to allow a satellite antenna of a size or at a location contrary to the specifications of this section, if the applicant can demonstrate that the specifications of this section would not permit a satellite antenna to be erected in such a manner that would make reasonable reception of transmission possible. The Township Zoning Hearing Board may prescribe measures, such as landscaping or buffering, to insure that the antenna will be aesthetically compatible with the neighborhood or district in which the antenna is located.

J.K. No regulations in this Section shall be construed to supersede applicable regulations of the Federal Communication Commission where the Township has no jurisdiction of such supersedence.

§225-413. Retail Sales of Agricultural Products Grown on Site.

In any zoning district, the retail sale of agricultural, horticultural or silvicultural products grown on site may be offered for retail sale, provided all other applicable sections of this Chapter are complied with and the use is further subject to the following requirements:

A. Any structure used to display such goods shall be less than 600 square feet in size, be located at least 50 feet from any side or rear property line and have a maximum height of 15 feet.

B. The structure shall be set back at least 20 feet from the street right-of-way.

C. Off-street parking shall be provided for all employees and customers. No more than 3 employees shall be permitted, unless the employees are residents of a dwelling located on the property.

D. The total area of all signs shall not exceed 25 square feet.

E. At least 50% of the product sold on site shall be grown, or otherwise produced on the premises from which the sales are to occur. This rule shall not apply under circumstances of crop failure or other circumstances expressly indicated by §§ 951-957 of the Pennsylvania Right-to-Farm Act.

§225-414. Garage Sales.

Garage, yard, moving, barn or similar types of residential (non-commercial) related sales shall be permitted in all zoning districts, subject to the following conditions:

F. All activities shall be conducted in such a manner that no hazards, nuisances, or traffic-safety issues are created.

G. The duration of such sales shall not exceed two consecutive days.

H. Such activity may only offer personal possessions for sale; no import or stocking of inventory shall be permitted.

I. Not more than six such sales shall be conducted each year on any property.

J. Signs for Ggarage/yard sales shall comply with §225-403401.46.F.A.1 of this Chapter and relevant sections of this Chapter relating to signs.

§225-415. Outdoor Storage of Recreational Activity Vehicles and Utility Vehicles.

A recreational activity vehicle or utility vehicle shall be parked, stored, or otherwise kept on a premises only if such vehicle is placed behind the front face of the principal building and at least 10 feet from a property line or a side or rear alley, and at least 25 feet from an adjacent street other than a side or rear alley. If the vehicle adjacent to a property line or a side or rear alley is completely screened from view by a fence that complies with the criteria of §225-407 or an entirely opaque vegetative barrier, such vehicle may be parked, stored, or otherwise kept behind such fence or barrier.

§225-416. Use of Searchlights for Promotional Purposes.

Searchlights may be used for attention-attracting promotional activities with the following stipulations:

A. Searchlights shall not be used more than 10 days per year on any property and shall not be used more than four consecutive days in any 90 day period of time.

B. Searchlights shall only be illuminated a minimumpermitted if located at least of 500 feet from any occupied dwelling unit.

C. Searchlights shall only be aimed skyward to such a degree that the light beam is not focused on any building.

§225-417. Access Areas for Fire Apparatus.

Occupied buildings or structures which attain a height in excess of 40 feet shall have at a minimum two sides of the building or structure accessible to fire apparatus by way of a permanent hard surface area adjacent to the building or structure. The permanent hard surface area shall be asphalt, concrete, brick, paver block or cobblestone capable of accommodating fire department aerial apparatus and shall be a minimum of 20 feet in width. The access areas shall be situated so that they are parallel to the building with the closest side of the access area being located no more than 15 feet from the building or structure and the furthest side of the access area being located no more than 40 feet from the building or structure. The access areas may also be used as a thoroughfare but may not be used for parking areas or areas for loading and unloading. Fire department hose connections for the building or structure's fire suppression system shall be located adjacent to at least one of the fire apparatus access areas.

§225-418. Special Provisions for Occupied Buildings Greater than 95 Feet in Height.

A. Occupied buildings or structures which are greater than 95 feet in height as permitted in the Industrial, Medical Campus Central and Commercial Recreation shall meet the following minimum requirements in addition to any other applicable code or regulation:

1. The requirements of the National Fire Protection Association, Inc., Life Safety Code, 1991 Edition.

2. The requirement of the National Fire Protection Association, Inc., Publication Standards 13, 13A, 13R, 14, 20 and 24.

3. An integrated telephone communication system of two -hour fire rated materials shall be provided on all floors.

4. Standpipe and sprinkler connection fixtures shall be located on front or street side of building or structure.

5. Enunciator panels shall be located inside and as close as practical to the front door of the building or structure.

6. Knox boxes shall be provided on all locations with any auto-alarm, detection, sprinkler or standpipe system.

7. Hose preconnects that allow for full access to all floor areas shall be provided.

8. All materials shall be rated a minimum of a two hour fire rating.

9. Forcible entry tools, to include Pick Head Axe, Halligan Tools, K-tool and Rabbit Tool, shall be provided on each floor.

10. Preconnected air cascade systems shall be provided on each floor to provide for a quick-fill system to refill self-contained breathing apparatus to match Hershey Fire Department equipment.

11. Retro-fit for sprinkler systems shall be provided.

A. Prior to issuance of a building permit and certificate of use and occupancy for any building or structure regulated by this section a certified fire protection engineer shall review and find that the building or structure complies or will comply with this section. The certified fire protection engineer shall be selected by Derry Township the Township and total costs of the review and report shall be borne by the applicant. Occupied buildings or structures which are greater than 95 feet in height as permitted in the Industrial, Medical Campus and Commercial Recreation zoning districts shall meet the following minimum requirements in addition to any other applicable code or regulation:

1. The requirements of the Uniform Construction Code shall apply to all buildings.

2. Standpipe and sprinkler connection fixtures shall be located on front or street side of building or structure.

3. Enunciator panels shall be located inside and as close as practical to the front door of the building or structure.

4. Knox boxes shall be provided on all locations with any auto-alarm, detection, sprinkler or standpipe system.

5. Preconnected air cascade systems shall be provided on each floor to provide for a quick-fill system to refill self-contained breathing apparatus to match Hershey Fire Department equipment is required for building in excess of 14 stories.

6. Retro-fit for sprinkler systems shall be provided.

B.

§225-4198. Special Conditions for No Impact Home-Based Businesses and Home Occupations in Certain Districts.

A. No impact home-based businesses shall be permitted as an accessory use in all zoning districts. No impact home-based businesses shall comply with the following requirements:

1. The business activity shall be compatible with the residential use of the property and surrounding residential uses.

2. The business shall employ no employees other than family members residing in the dwelling unit.

3. There shall be no display or sale of retail goods and no stockpiling of inventory of a substantial nature.

4. There shall be no outside appearance of a business use, including, but not limited to, parking, signage, or lighting.

5. The business activity may not use any equipment or process which creates noise, vibration, glare, fumes, odors or electrical or electronic interference, including interference with radio or television reception, which is detectable in the neighborhood where the business is conducted.

6. The business activity may not generate any solid waste or sewage discharge, in volume or type, which is not normally associated with a residential use in a neighborhood.

7. The business activity shall be conducted only within the dwelling unit and may not occupy more than 25% of the habitable floor area.

8. The business may not be an illegal activity.

B. Home occupations may be established an accessory use in the Conservation, R-1, R-2, and R-3 Zin all zoning dDistricts only in conformity with the following:

1. There shall be not more than one home occupation permitted per dwelling unit.

2. Home occupations shall only be permitted in a single family dwelling or single family semidetached dwelling.

2.3. All employees shall be residents of the dwelling unit in which the home occupation is conducted.

3.4. No change shall occur to the outside of the dwelling unit so as to have the dwelling unit appear to be used as other than a dwelling unit.

4.5. A maximum of one sign may be installed in accordance with the requirements for either a ground sign, or a projecting sign, as described in §225- in the Limited Sign Overlay District.

5.6. Not more than 25% of the floor area of the dwelling unit shall be devoted to each home occupation use.

6.7. The portion of the dwelling unit to be used for a home occupation shall comply with all requirements of the prevailing Derry Township Building Code.

7.8. A home occupation shall not cause the shipment or receipt of merchandise attributable to the home occupation to occur at intervals of time exceeding one time per week. Such shipment or receipt of merchandise attributable to the home occupation shall not occur with vehicles which exceed a registered gross weight of 9,000 pounds.

8.9. No noise, vibration, smoke or other particulate matter, or other objectionable affects shall be produced by a home occupation other than that which would occur if the dwelling would not contain a home occupation.

9.10. No goods or materials attributable to the home occupation shall be stored outdoor or in a detached accessory building other than vehicles when stored or parked in a manner consistent with this Chapter or any applicable regulations relating to vehicle parking or storage.

10.11. At least one off-street parking space shall be provided for each customer that is anticipated on-site during peak operating hours.

§225-42019. Communications antennas, communications ancillary equipment, and communications towers.[BJW11]

A. [SS12] Purpose. The purpose of this section is to:

1. Accommodate the need for communications antennas, communications ancillary equipment, and communications towers while regulating their location and use in the Township.

2. Establish procedures for design, siting, construction, installation, maintenance, and removal of communications antennas, communications ancillary equipment, and communications towers in the Township, including facilities located both inside and outside of the public rights-of-way.

3. Minimize adverse visual effects of communications antennas, communications ancillary equipment, and communications towers on the surrounding landscape by methods including, but not limited to, the use of stealth technology, proper placement, and co-location.

4. Avoid potential damage to adjacent properties from structural failure of buildings or towers due to the placement of communications antennas, and provide for any other measures deemed necessary to promote the health, safety, and welfare of the Township residents, property owners, visitors, and businesses.

5. Accommodate new wireless technologies, including, but not limited to, distributed antenna systems, data collection units, and similar small cell communications systems that may arise with further technological advances in the communications industry.

6. Encourage the co-location of communications antennas on existing towers, buildings, and other structures that are structurally capable of supporting the antennas, rather than constructing new communications towers.

7. Comply with all provisions and requirements of the Pennsylvania Wireless Broadband Collocation Act, as may be amended, and any other applicable State and/or Federal regulations governing communications antennas and supporting structures.

B. General design requirements for all communications antennas, communications ancillary equipment, and supporting structures, including building-mounted communications antennas, utility-mounted communications antennas, and communications towers.

1. Permit and administrative review requirements.

(a) The applicant must provide a submittal package to the Township including a cover letter, permit application, site plan, and supporting documents indicating the intent to construct a communications antenna, communications ancillary equipment and/or a communications tower, in order to initiate the administrative review process under this section. Within 30 days of receiving the submittal package, the Township shall notify the applicant in writing of any additional information required to complete the administrative review.

(b) A submittal package shall include an application for a zoning permit, and a building permit if applicable, for all newly-constructed or structurally modified communications antennas, communications ancillary equipment, and communications towers. Communications antennas that are to be co-located on an existing structure shall not require additional permit approvals, provided the applicant submits all required information ~~under this subsection B and §225-~~ in order for the Township to determine compliance during the administrative review.

(c) All construction documents included in a submittal package shall be signed and sealed by a Pennsylvania-registered Professional Engineer, Architect, and/or Land Surveyor, as appropriate.

(d) The applicant shall be required to obtain all necessary approvals from PennDOT and public utility companies for installation of a communications antenna on their utility or service structures. Evidence of said approvals shall be submitted to the Township prior to the conclusion of the administrative review and/or issuance of a zoning permit for the use.

(e) Prior to the commencement of the administrative review and/or issuance of building and zoning permits for the construction of a freestanding communications tower, the applicant shall file a Stormwater Management Plan under the requirements of Chapter 174 of the Township of Derry Code of Ordinances. In the event the construction of the Tower will result in a subdivision or land development beyond any lease or easement agreement, a Subdivision and Land Development Plan meeting the requirements of Chapter 185, Subdivision and Land Development, shall also be submitted.

(f) Within 60 days of the date of the Township's receipt of a submittal package for the co-location of a communications antenna, or for a distributed antenna system, data collection unit, or similar small-cell technology device; or 150 days for all other communications antennas, the Township shall make a final decision on the administrative review and advise the applicant of the decision in writing. If the administrative review is approved, required permits will be issued as the final determination of the review process. This review period may be extended, if both parties agree to the time extension in writing.

2. All communications antennas and supporting structures shall be designed, constructed, operated, maintained, repaired, modified, and removed in strict compliance with all current and applicable technical, safety, and safety-related codes in effect at the time of such action, including, but not limited to, the Township's Code of Ordinances, the American National Standards Institute (ANSI) Code, the National Electrical Safety Code,

and the National Electrical Code, as well as the accepted industry practices of the National Association of Tower Erectors. The applicant shall submit detailed construction and elevation drawings indicating how the communications antenna will be mounted on the tower, as well as documents certifying that the communications antenna and supporting structure are designed to withstand the effects of wind according to the standard designated by ANSI, prepared by the engineering departments of the Electronics Industry Association and Telecommunications Industry Association (ANSI/EIA-222-G, as amended). Where conflict may occur between the codes, the most stringent requirement shall apply.

3. All communications antennas, communications ancillary equipment, and supporting structures shall be kept and maintained in good condition, order, and repair by qualified maintenance and construction personnel so that the same shall not endanger the life of any person or any property in the Township. The owner of the communications antenna and communications ancillary equipment shall perform a structural analysis of the antenna supporting structure in accordance with ANSI/EIA/TIA-222, as amended, whenever new antennas or equipment are proposed to be added to the supporting structure, and provide a written report of the analysis to the Township with the building permit application, or at the time of administrative review if a building permit is not required.

4. Communications antennas, communications ancillary equipment, and supporting structures shall comply with all applicable standards established by the Federal Communications Commission governing human exposure to electromagnetic radiation. Evidence of compliance with these standards shall be submitted by the applicant to the Township with the permit submittal package.

5. The owner or operator of a communications antenna shall be licensed by the Federal Communications Commission to operate such an antenna, when such licensure is required in accordance with Federal law.

6. No communications antennas shall interfere with public safety communications or the reception of broadband, television, radio, or other communication services used by persons within the Township.

7. No signs or lights shall be mounted on or be directed at a communications antenna except as may be required by the National Electrical Code; or the Federal Communications Commission, the Federal Aviation Administration, or any other governmental agency which has jurisdiction.

8. Communications antennas shall comply with all applicable Federal Aviation Administration, Commonwealth Bureau of Aviation, and applicable Airport Safety Zone Overlay District regulations.

9. Any applicant proposing a communications antenna shall submit any applicable access agreements and/or easement descriptions that are necessary to provide entrance to the supporting structure on which the communications antenna is to be attached to confirm that installation and maintenance of the communications antenna can be accomplished.

10. Any communications antenna or communications ancillary equipment, or portion thereof, that is no longer in use for its approved purpose shall be removed at the facility owner's expense. The owner shall provide the Township with a copy of any notice to the Federal Communications Commission of intent to cease operations. If the facility remains unused for a period of 6 consecutive months, the owner or operator of the antenna and communications ancillary equipment shall, within a maximum of 90 days after the end of the 6-month period, remove the communications antenna, its support structure, and all

accessory uses and equipment. In the case of multiple operations sharing the use of a single communications tower, this provision shall not become effective until all users cease operations.

11. All communications antennas and supporting structures that are located within a Township public right-of-way are subject to the Township's right to annually fix a fair and reasonable compensation to be paid for use and occupancy of the public right-of-way for the deployment of equipment within the public right-of-way. The owner of each communications tower, and when co-located, each communications antenna, shall pay an annual fee to compensate the Township for the costs incurred in connection with the administration of activities described above. The annual street right-of-way management fee for communications towers shall be determined by the Township and authorized by resolution of the Township Board of Supervisors, or by other legally binding contract prepared by the owner of the communications antenna where such terms are acceptable to the Township.

12. All new supporting structures for communications antennas shall be designed in all respects to accommodate both the applicant's communications antenna and future co-location of additional comparable antennas, so that the co-location of a future communications antenna will not create a violation of any applicable requirement of this chapterChapter. This requirement shall not apply if the applicant is proposing to replace an existing structure, such as a utility or light pole, with a new structure that will continue to serve the same purpose.

13. Stealth design methods may be required for all communications antennas, communications ancillary equipment, and supporting structures, where determined appropriate by the Zoning Officer. Acceptable methods shall include, but not be limited to, visual screening; concealment in existing, proposed, or mock buildings, structures, or facades; or blending the design of the facilities through use of materials and colors of the existing supporting structure or to the visual character of structures or landscape located in close proximity to the proposed facilities. Where it can be demonstrated to the satisfaction of the Zoning Officer that stealth design is technologically or commercially impracticable or infeasible, a communications antenna supporting structure shall be a low gloss light blue, light green, or light gray color unless other colors will blend better with the building's walls and are approved by the Township, or are otherwise required by Federal Communications Commission or Federal Aviation Administration regulations.

14. Each person that owns or operates a communications antenna, communications tower, communications ancillary equipment, or portion thereof, shall, at their sole cost and expense, indemnify, defend and hold harmless the Township, its elected and appointed officials, employees and agents, at all times against any and all claims for personal injury, including death, and property damage arising in whole or in part from, caused by, or connected with any act or omission of the person, their officers, agents, employees, or contractors arising out of, but not limited to, the construction, installation, operation, maintenance, or removal of the communications antenna, communications tower, or communications ancillary equipment, or portion thereof. Each person that owns or operates a communications antenna, communications tower, communications ancillary equipment, or portion thereof, shall defend any actions or proceedings against the Township in which it is claimed that personal injury, including death, or property damage was caused by the construction, installation, operation, maintenance or removal of a communications antenna, communications tower, communications ancillary equipment, or portion thereof. The obligation to indemnify, hold harmless, and defend shall include, but not be limited to, the obligation to pay judgments, injuries, liabilities, damages, reasonable attorneys' fees, reasonable expert fees, court costs, and all other costs of indemnification.

C. Building-mounted communications antennas. Building-mounted communications antennas shall be a permitted use in all zoning districts in accordance with the following:

1. The applicant shall demonstrate compliance with the general design requirements of Section 225-420.B, in addition to the requirements of this section.

2. Building-mounted communications antenna shall not be permitted on single-family detached, single-family semidetached, single-family attached, or two-family detached dwellings.

3. Building-mounted communications antennas and all related components that are located in the Suburban Residential, Village Residential, Attached Residential, Multifamily Residential, Downtown Commercial and Village Core zoning districts shall be completely concealed or shall provide for stealth design methods that are compatible with the building that the antennas are to be mounted on.

4. Height requirements. Building-mounted communications antennas shall be kept to the minimum height needed to fill the gap in coverage or provide the necessary capacity, as the case may be; however, in no case shall the communications antenna exceed the existing building height by more than 50%. Under no circumstances shall the communications antenna and supporting structure exceed the height of a building that is nonconforming, with respect to the permitted building height of the underlying zoning district, by more than 20 feet.

5. The applicant shall submit evidence from a Pennsylvania-registered professional engineer certifying that the proposed installation of a building-mounted communications antenna, its communications ancillary equipment and supporting structures or other devices, will not exceed the structural capacity of the building when considering ice and snow loads as referenced in the prevailing Derry Township Building Code.

6. Communications ancillary equipment.

a. Communications ancillary equipment may be building-mounted, provided the equipment is not located on a street-facing wall and will be located at least 8 feet off of the ground. Proposed equipment materials shall comply with the stealth design methods identified in §225-420.B(13).

b. Ground-mounted communications ancillary equipment may be established as part of the building-mounted communications antenna, provided the following criteria is met:

i. The equipment and structures shall comply with the yard area requirements of the underlying zoning district in which the equipment is to be located. Where yard areas have been established for a detached accessory use, the equipment structures shall comply with these requirements so long as the equipment is to be freestanding or attached to another accessory use structure. Where no yard areas have been established for a detached accessory use, or if the equipment structures are attached to a principal use structure, the yard areas shall comply with the underlying zoning district for a principal use.

ii. A fence shall be required around all components of the communications ancillary equipment and shall be a minimum height of 8 feet. The fence shall be consistent with the provisions of §225- of this chapterChapter. Gates shall be locked, except during such times as the

communications equipment is manned by operations or maintenance personnel.

iii. An evergreen screen shall be required to surround the communications ancillary equipment and fence location. The screen shall consist of a row of evergreen trees which shall be planted at a maximum spacing of 8 feet, center to center. The evergreen screen shall be a minimum height of 4 feet at planting and shall be a species that is expected to grow to a minimum height of 15 feet at maturity. In addition, existing vegetation which would aid in screening at and around the site shall be preserved to the greatest extent possible.

7. Building-mounted communications antenna shall not be located on a building (or structure) that is listed on either the National or Pennsylvania Registers of Historic Places, or is eligible to be so listed, or is listed on an official registry of historic structures maintained by the Township, if such list is maintained, or has been otherwise designated by the Township to be of historical significance.

D. Communications towers that are 50 feet or less in height and utility-mounted communications antenna. Communications towers that are less than 50 feet in height and utility-mounted communications antenna shall be permitted in all zoning districts, in accordance with the following regulations:

1. The applicant shall demonstrate compliance with the general design requirements of Section 225-420_____.B, in addition to the requirements of this section.

2. Location and setback requirements.

a. New communications towers shall not be permitted within the Suburban Residential, Village Residential, Multifamily Residential, or Attached Residential zoning districts, or within a public street right-of-way that is adjacent to any of these districts. Under these circumstances, communications antennas shall be utility-mounted, on existing or replacement utility poles, traffic signals, or streetlights, including utility poles that are located inside or outside of a street right-of-way.

b. Utility-mounted communications antennas shall not be permitted on any acorn-style streetlight or streetlights having shades which resemble Hershey's Kisses.

c. Utility-mounted communications antennas shall be kept to the minimum height needed to function in accordance with industry standards; however, in no case shall any utility-mounted communications antenna exceed a height of 50 feet, as measured from the base of the pole structure to the top of all attached antenna, unless specifically authorized in this section. If the pole structure already exceeds 50 feet in height, the replacement pole shall not increase the height of the existing or former pole structure by more than 10 feet.

d. Communications towers constructed outside of the street right-of-way shall be located a minimum of 100 feet from an existing dwelling on an adjacent lot.

3. Communications ancillary equipment shall comply with the following:

a. Communications towers and utility-mounted communications antennas shall contain communications ancillary equipment installed in a manner that will not inhibit pedestrian or vehicular movement, or otherwise create safety hazards to, or inconvenience the use of a street right-of-way, or other vehicular or pedestrian

access way. All ancillary equipment shall be mounted on the tower or utility pole structure unless the applicant can demonstrate that this is not structurally feasible; in which case, the ancillary equipment may be ground-mounted, but shall not exceed four (4) square feet in area and 84 inches in height.

b. Ground-mounted communications ancillary equipment that will exceed four (4) square feet in area or 84 inches in height shall comply with the following:

i. .Ancillary equipment meeting the requirements of this Section shall only be permitted for communications antennas and towers that are located outside of a street right-of-way.

ii. The equipment and structures shall comply with the yard area requirements of the underlying zoning district in which the equipment is to be located. Where yard areas have been established for a detached accessory use, the equipment structures shall comply with these requirements so long as the equipment is to be freestanding or attached to another accessory use structure. Where no yard areas have been established for a detached accessory use, or if the equipment structures are attached to a principal use structure, the yard areas shall comply with the underlying zoning district for a principal use. A communications tower is to be considered a principal use structure.

iii. A fence shall be required around all components of the communications ancillary equipment and shall be a minimum height of 8 feet. The fence shall be consistent with the provisions of §225-171.B of this chapterChapter. Gates shall be locked, except during such times as the communications equipment is manned by operations or maintenance personnel.

iv. An evergreen screen shall be required to surround the communications ancillary equipment and fence location. The screen shall consist of a row of evergreen trees which shall be planted at a maximum spacing of 8 feet, center to center. The evergreen screen shall be a minimum height of 4 feet at planting and shall be a species that is expected to grow to a minimum height of 15 feet at maturity. In addition, existing vegetation which would aid in screening at and around the site shall be preserved to the greatest extent possible.

4. Additional design requirements.

a. New communications towers constructed within the street right-of-way shall comply with the requirements of §225-420197.B.(13) to the greatest extent possible.

b. If the communications antenna and ancillary equipment are placed on an existing streetlight, traffic light, or utility pole, the communications antenna and communications ancillary equipment shall be painted, coated, or otherwise treated to match the existing supporting structure.

c. All materials of communications towers and utility-mounted communications antennas in the street right-of-way shall be subject to approval by the Township, including review and approval by the Design Advisory Board if the tower or communications antenna is to be located within the boundaries of the Chocolate Avenue Preservation Overlay District.

E. Communications towers greater than 50 feet in height. Communications towers greater than 50 feet in height shall be permitted by special exception in all zoning districts, except the Suburban Residential, Village Residential, Attached Residential, Multifamily Residential, Downtown Commercial, and Village Core zoning districts, in accordance with the requirements of §225-104.

F. Co-location of communications antennas. Communications antennas that are to be located on a tower, building, utility pole or other suitable structure that already contains an existing communications antenna shall be permitted in all zoning districts. All applications for such a facility shall include the following information:

1. Elevation details shall be submitted to demonstrate the co-location of the communications antenna will comply with the following requirements:
2. For communications antenna that are located in the street right-of-way, the co-located antenna shall not increase the height of the approved supporting structure by more than 10%, or by 10 feet, whichever is greater. For communications antenna located outside of the street right-of-way, the co-located antenna shall not increase the height of the approved supporting structure by more than 10% or by the height of one additional antenna array with separation from the nearest existing antenna not to exceed 20 feet, whichever is greater.

3. For communications towers, other than towers in the street right-of-way, no co-located antenna shall protrude from the face of the tower by more than 20 feet, or more than the width of the tower structure at the level of the proposed co-located antenna, whichever is greater. Co-located antenna on all other approved supporting structures shall not protrude from the face of the structure by more than six (6) feet.

4. Any further increase in the height of an approved support structure which has already been extended by more than 10% of its originally approved height or by the height of one additional antenna array in accordance with the provisions of this Section, shall not occur unless approved by grant of a special exception from the Township Zoning Hearing Board. The applicant shall demonstrate the height increase will not negatively impact public safety with regard to the structural capacity of the supporting structure, that the additional antenna are necessary in order to fill a gap in coverage or provide the necessary capacity, as the case may be, and/or the increased height is necessary in order to prevent interference from other antenna located on the structure.

5. The permitted height increase for a co-located antenna that will be separated horizontally from other antennas, such as building-mounted communications antenna, shall be measured from the actual building height, not from the height of any existing communications antennas.

6. The applicant shall submit detailed construction drawings indicating how the communications antenna will be mounted on the supporting structure, or portion thereof, as well as documents certifying that the communications antenna is designed to comply with wind and structural loading requirements of applicable technical, safety, and safety-related codes, including, but not limited to, the Township's Code of Ordinances, the American National Standards Institute (ANSI) Code, as amended, the National Electric Safety Code, as amended, and the National Electrical Code, as amended. Where conflict may occur between the codes, the most stringent requirement shall apply.

7. A site plan shall be submitted to show property and lease lines, existing and proposed access drives, communications ancillary equipment location, or other site changes required to operate the co-located communications antenna. Any increase in dimensions to the communications antenna site area shall meet all setback and design requirements

of Section 225-420197.B and the requirements of Chapter 174, Stormwater Management, as applicable to the project.

A. Purpose. The purpose of this section is to:

1. Accommodate the need for communications antennas, communications ancillary equipment, and communications towers while regulating their location and use in the Township.

2. Establish procedures for design, siting, construction, installation, maintenance, and removal of communications antennas, communications ancillary equipment, and communications towers in the Township, including facilities located both inside and outside of the public rights-of-way.

3. Minimize adverse visual effects of communications antennas, communications ancillary equipment, and communications towers on the surrounding landscape by methods including, but not limited to, the use of stealth technology, proper placement, and co-location.

4. Avoid potential damage to adjacent properties from structural failure of buildings or towers due to the placement of communications antennas, and provide for any other measures deemed necessary to promote the health, safety, and welfare of the Township residents, property owners, visitors, and businesses.

5. Accommodate new wireless technologies, including, but not limited to, distributed antenna systems, data collection units, and similar small cell communications systems that may arise with further technological advances in the communications industry.

6. Encourage the co-location of communications antennas on existing towers, buildings, and other structures that are structurally capable of supporting the antennas, rather than constructing new communications towers.

7. Comply with all provisions and requirements of the Pennsylvania Wireless Broadband Collocation Act, as may be amended, and any other applicable State and/or Federal regulations governing communications antennas and supporting structures.

B. General design requirements for all communications antennas, communications ancillary equipment, and supporting structures, including building-mounted communications antennas and communications towers <50 feet.

1. Permit and administrative review requirements.

a. The applicant must provide a submittal package to the Township including a cover letter, permit application, site plan, and supporting documents indicating the intent to construct a communications antenna, communications ancillary equipment compound and/or a communications tower, in order to initiate the administrative review process under this section. Within 30 days of receiving the submittal package, the Township shall notify the applicant in writing of any additional information required to complete the administrative review.

b. A submittal package shall include an application for a zoning permit and a building permit for all newly-constructed or structurally modified communications antennas, communications ancillary equipment, and communications towers. A building permit shall not be required for communications antennas that are to be supported by an existing utility pole, streetlight, traffic light, or other structure that is not subject to approval under the Township Building Code. Communications antennas that are to be co-located on an existing structure shall not require additional permit

approvals, provided the applicant submits all required information under this subsection B and §225-419.E in order for the Township to determine compliance during the administrative review.

c. All construction documents included in a submittal package shall be signed and sealed by a Pennsylvania-registered Professional Engineer, Architect, and/or Land Surveyor, as appropriate.

d. The applicant shall be required to obtain all necessary approvals from PennDOT and public utility companies for installation of a communications antenna on their utility or service structures. Evidence of said approvals shall be submitted to the Township prior to the conclusion of the administrative review and/or issuance of a zoning permit for the use.

e. Prior to the commencement of the administrative review and/or issuance of building and zoning permits for the construction of a freestanding communications tower as a principal use on a lot, the applicant must receive approval of a subdivision and/or land development plan from the Derry Township Board of Supervisors, and the plan must be recorded in the Office of the Recorder of Deeds of Dauphin County. The plan shall comply, at a minimum, with the requirements of Chapter 185, Subdivision and Land Development.

f. Within 60 days of the date of the Township's receipt of a submittal package for the co-location of a communications antenna, or for a distributed antenna system, data collection unit, or similar small-cell technology device; or 150 days for all other communications antennas, the Township shall make a final decision on the administrative review and advise the applicant of the decision in writing. If the administrative review is approved, required permits will be issued as the final determination of the review process. This review period may be extended, if both parties agree to the time extension in writing.

2. All communications antennas and supporting structures shall be designed, constructed, operated, maintained, repaired, modified, and removed in strict compliance with all current and applicable technical, safety, and safety-related codes in effect at the time of such action, including, but not limited to, the Township's Code of Ordinances, the American National Standards Institute (ANSI) Code, the National Electrical Safety Code, and the National Electrical Code, as well as the accepted industry practices of the National Association of Tower Erectors. The applicant shall submit detailed construction and elevation drawings indicating how the communications antenna will be mounted on the tower, as well as documents certifying that the communications antenna and supporting structure are designed to withstand the effects of wind according to the standard designated by ANSI, prepared by the engineering departments of the Electronics Industry Association and Telecommunications Industry Association (ANSI/EIA-222-E, as amended). Where conflict may occur between the codes, the most stringent requirement shall apply.

3. All communications antennas, communications ancillary equipment, and supporting structures shall be kept and maintained in good condition, order, and repair by qualified maintenance and construction personnel so that the same shall not endanger the life of any person or any property in the Township. The owner of the communications antenna, communications ancillary equipment, and supporting structures shall perform a minimum of one on-site inspection each year. The owner shall provide the Township with advance notice of the inspection. The on-site inspection shall include a climb of the supporting structure, or other accepted industry standard of inspection, and a written report, prepared by a Pennsylvania-registered professional engineer, detailing the results of the on-site inspection, including the "climbing inspection" or other accepted industry standard

of inspection. The report shall be submitted to the Township within 30 days of the inspection. In the event the inspection reveals any issues with the structural integrity of the communications antenna or other facility, the owner of the communications antenna or other facility shall, within 30 days, take any and all steps necessary to repair the facility and submit a final report to the Township, indicating the nature of the repairs made. The report shall include a certification of structural integrity by a Pennsylvania-registered professional engineer. Failure to make the necessary repairs and submit a certification of structural integrity within 30 days of the original inspection shall result in the revocation of the zoning and/or building permits and shall require the prompt removal of the communications antenna, communications ancillary equipment, and supporting structures, or portion thereof.

4. Communications antennas, communications ancillary equipment, and supporting structures shall comply with all applicable standards established by the Federal Communications Commission governing human exposure to electromagnetic radiation. Evidence of compliance with these standards shall be submitted by the applicant to the Township with the permit submittal package.

5. The owner or operator of a communications antenna shall be licensed by the Federal Communications Commission to operate such an antenna.

6. No communications antennas shall interfere with public safety communications or the reception of broadband, television, radio, or other communication services used by persons within the Township.

7. No signs or lights shall be mounted on or be directed at a communications antenna except as may be required by the National Electrical Code; or the Federal Communications Commission, the Federal Aviation Administration, or any other governmental agency which has jurisdiction.

8. Communications antennas shall comply with all applicable Federal Aviation Administration, Commonwealth Bureau of Aviation, and applicable Airport Safety Zone Overlay District regulations.

9. All supporting structures shall be fitted with anti-climbing devices or otherwise be designed to be unclimbable if located in a manner that would enable unrestricted access to the tower. In lieu of the anti-climbing devices, the supporting structure may be located within the fenced compound area required by §225-419.B.10.b.

10. Ground-mounted communications ancillary equipment compounds.

    a. Ground-mounted communications ancillary equipment compounds may be established as part of the communications antenna. The equipment and structures within the compound shall comply with the yard area requirements of the underlying zoning district in which the equipment compound is to be located. Where yard areas have been established for a detached accessory use, the equipment structures shall comply with these requirements so long as the equipment is to be freestanding or attached to another accessory use structure. Where no yard areas have been established for a detached accessory use, or if the equipment structures are attached to a principal use structure, the yard areas shall comply with the underlying zoning district for a principal use. A communications tower is to be considered a principal use structure.

    b. A fence shall be required around the entire communications ancillary equipment compound and shall be a minimum height of 8 feet. The fence shall be consistent with the provisions of §225-407 of this chapter. Gates shall be locked, except

during such times as the communications equipment is manned by operations or maintenance personnel.

c. An evergreen screen shall be required to surround the communications ancillary equipment compound. The screen shall consist of a row of evergreen trees which shall be planted at a maximum spacing of 8 feet, center to center. The evergreen screen shall be a minimum height of 4 feet at planting and shall be a species that is expected to grow to a minimum height of 15 feet at maturity. In addition, existing vegetation which would aid in screening at and around the site shall be preserved to the greatest extent possible.

d. This section shall not apply to ground-mounted communications ancillary equipment compounds located within a public street right-of-way. See §225-419.D.3.b.

11. Parking and access requirements.

a. A minimum of one paved off-street parking space shall be provided on the site on which the communications antenna is located, in accordance with the provisions of §225- ___ and §225- of this chapter. The parking space shall be in addition to the minimum number of spaces currently required by §225-___ of this chapter for other uses which may exist on the site.

b. Any applicant proposing a communications antenna to be co-located on a supporting structure shall submit agreements and/or easements necessary to provide access to the supporting structure on which the communications antenna is to be attached to confirm that installation and maintenance of the communications antenna can be accomplished.

12. Any communications antenna or communications ancillary equipment compound, or portion thereof, that is no longer in use for its approved purpose shall be removed at the facility owner's expense. The owner shall provide the Township with a copy of any notice to the Federal Communications Commission of intent to cease operations. If the facility remains unused for a period of 6 consecutive months, the owner or operator of the antenna and communications ancillary equipment compound shall, within a maximum of 90 days after the end of the 6-month period, remove the communications antenna, its support structure, and all accessory uses and equipment. In the case of multiple operations sharing the use of a single communications tower, this provision shall not become effective until all users cease operations.

13. All communications antennas and supporting structures that are located within a Township public right-of-way are subject to the Township's right to annually fix a fair and reasonable compensation to be paid for use and occupancy of the public right-of-way for the deployment of equipment within the public right-of-way. The owner of each communications tower, and when co-located, each communications antenna, shall pay an annual fee to compensate the Township for the costs incurred in connection with the activities described above. The annual street right-of-way management fee for communications towers shall be determined by the Township and authorized by resolution of the Township Board of Supervisors, or by other legally binding contract prepared by the owner of the communications antenna where such terms are acceptable to the Township.

14. All proposed supporting structures for communications antennas shall be designed in all respects to accommodate both the applicant's communications antenna and future co-location of additional comparable antennas, so that the co-location of a future

communications antenna will not create a violation of any applicable requirement of this chapter.

15. Stealth design methods shall be required for all communications antennas, communications ancillary equipment, and supporting structures. Acceptable methods shall include, but not be limited to, visual screening; concealment in existing, proposed, or mock buildings, structures, or facades; or blending the design of the facilities through use of materials and colors of the existing supporting structure or to the visual character of structures or landscape located in close proximity to the proposed facilities. Where it can be demonstrated to the satisfaction of the Zoning Officer that stealth design is technologically or commercially impracticable or infeasible, a communications antenna supporting structure shall be a low gloss light blue, light green, or light gray color unless other colors will blend better with the building's walls and are approved by the Township, or are otherwise required by Federal Communications Commission or Federal Aviation Administration regulations.

16. Each person that owns or operates a communications antenna, communications tower, communications ancillary equipment, or portion thereof, shall, at their sole cost and expense, indemnify, defend and hold harmless the Township, its elected and appointed officials, employees and agents, at all times against any and all claims for personal injury, including death, and property damage arising in whole or in part from, caused by, or connected with any act or omission of the person, their officers, agents, employees, or contractors arising out of, but not limited to, the construction, installation, operation, maintenance, or removal of the communications antenna, communications tower, or communications ancillary equipment, or portion thereof. Each person that owns or operates a communications antenna, communications tower, communications ancillary equipment, or portion thereof, shall defend any actions or proceedings against the Township in which it is claimed that personal injury, including death, or property damage was caused by the construction, installation, operation, maintenance or removal of a communications antenna, communications tower, communications ancillary equipment, or portion thereof. The obligation to indemnify, hold harmless, and defend shall include, but not be limited to, the obligation to pay judgments, injuries, liabilities, damages, reasonable attorneys' fees, reasonable expert fees, court costs, and all other costs of indemnification.

17. Each person that owns or operates a communications antenna, communications tower, communications ancillary equipment, or portion thereof, shall sign a statement of acknowledgment of their obligation to meet the requirements of this chapter, including, but not necessarily limited to, the maintenance and construction of new communications antennas, communications towers, and communications ancillary equipment; and the removal of said unused facilities, as well as the indemnification of the Township in the construction, installation, operation, maintenance, or removal of said facilities, prior to the issuance of a zoning and/or building permit.

C. Building-mounted communications antennas. Building-mounted communications antennas shall be a permitted use in all zoning districts except the _____ zoning districts, in accordance with the following:

1. The applicant shall demonstrate compliance with the general design requirements of Section 225-419.B, in addition to the requirements of this section.

2. Height requirements. Building-mounted communications antennas shall be kept to the minimum height needed to function in accordance with industry standards; however, in no case shall the communications antenna exceed the existing building height by more than 50%. Under no circumstances shall the communications antenna and supporting

structure exceed the height of a building that is nonconforming, with respect to the permitted building height of the underlying zoning district, by more than 20 feet.

3. The applicant shall submit evidence from a Pennsylvania-registered professional engineer certifying that the proposed installation of a building-mounted communications antenna, its communications ancillary equipment and supporting structures or other devices, will not exceed the structural capacity of the building when considering ice and snow loads as referenced in the prevailing Derry Township Building Code.

4. Communications ancillary equipment may be building-mounted, provided the equipment is not located on a street-facing wall and will comply with the setback, screening, and landscaping requirements for a ground-mounted communications ancillary equipment compound identified in §225-___.B(10). The landscaping and screening requirements shall not apply if the equipment is located at least 8 feet off of the ground and the materials of the equipment will comply with the stealth design methods identified in §225-___.B.(15).

5. Building-mounted communications antenna shall not be located on a building (or structure) that is listed on either the National or Pennsylvania Registers of Historic Places, or is eligible to be so listed, or is listed on an official registry of historic structures maintained by the Township, if such list is maintained, or has been otherwise designated by the Township to be of historical significance.

D. Communications towers that are 50 feet or less in height. Communications towers that meet this criteria are permitted in in all zoning districts, in accordance with the following regulations:

1. The applicant shall demonstrate compliance with the general design requirements of Section 225-419.B, in addition to the requirements of this section.

2. Location and setback requirements.

a. Communications antennas shall not be permitted on a new communications tower when located within the R-1, R-2, and R-3 Residential zoning districts, or within a public street right-of-way that is adjacent to any of these districts. Under these circumstances, communications antennas shall be located on existing utility poles, traffic signals, or streetlights. This shall include utility poles that are located inside or outside of a street right-of-way.

b. Communications antennas that are to be located in the public street right-of-way shall not be permitted on any lamppost-style streetlight or streetlights having shades which resemble Hershey's Kisses.

c. Newly constructed communications towers that will be constructed outside of the street right-of-way shall have a minimum yard area, for all yards, that is equal to the height of the tower, including all antennas.

d. Communications towers outside of the street right-of-way shall be located a minimum of 175 feet from any lands within the R-1, R-2 and R-3 zoning districts, as well as a minimum of 175 feet from an existing dwelling or a dwelling lot approved by the Township as part of a subdivision or land development plan.

3. Communications ancillary equipment shall comply with the following:

a. Communications towers that are outside of a street right-of-way may contain a ground-mounted communications ancillary equipment compound that complies with §225-___.B.(10).

b. Communications towers that are located within a street right-of-way shall contain communications ancillary equipment installed in a manner that will not inhibit pedestrian or vehicular movement, or otherwise create safety hazards to, or inconvenience the use of, the street right-of-way by pedestrians and motorists. All equipment shall be mounted on the tower structure unless the applicant can demonstrate that this is not structurally feasible, in which case the equipment shall be buried underground. As a last resort, if burying the ancillary equipment underground is not possible due to the location of existing improvements in the street right-of-way, then ground-mounted structures may be utilized, but shall not exceed 4 square feet or 84 inches in height.

4. Additional design requirements.

a. New communications towers constructed within the street right-of-way shall comply with the requirements of §225-___.B.(15) to the greatest extent possible.

b. If the communications antenna and ancillary equipment are placed on an existing streetlight, traffic light, or utility pole, the communications antenna and communications ancillary equipment shall be painted, coated, or otherwise treated to match the existing supporting structure.

c. All materials of communications towers in the street right-of-way shall be subject to approval by the Township.

E. Co-location of communications antennas. Communications antennas that are to be located on a tower, building, or suitable structure that already contains an existing communications antenna shall be permitted in all zoning districts. All applications for such a facility shall include the following information:

1. Elevation details shall be submitted to demonstrate the co-location of the communications antenna will not increase the height of the approved supporting structure by more than 20 feet, provided the following requirements are met:

a. Communications towers that are permitted by §225-___.D shall not exceed a height of 50 feet.

b. Communications towers that are permitted under §225-___.E may exceed the height in accordance with that section, provided the applicant has sufficient yard areas from all property lines that are equal to, or greater than, the height of the communications tower.

c. The permitted height increase for a building-mounted communications antenna shall be measured from the actual building height, not from the height of any existing communications antennas.

2. The applicant shall submit detailed construction drawings indicating how the communications antenna will be mounted on the supporting structure, or portion thereof, as well as documents certifying that the communications antenna is designed to comply with wind and structural loading requirements of applicable technical, safety, and safety-related codes, including, but not limited to, the Township's Code of Ordinances, the American National Standards Institute (ANSI) Code, as amended, the National Electric Safety Code, as amended, and the National Electrical Code, as amended. Where conflict may occur between the codes, the most stringent requirement shall apply.

3. A site plan shall be submitted to show property and lease lines, existing and proposed access drives, communications ancillary equipment compounds, or other site changes required to operate the co-located communications antenna. Any increase in dimensions to the communications ancillary equipment compound shall meet all applicable setback requirements and the requirements of Chapter 174, Stormwater Management, as applicable to the project.

§225-4210. Outdoor Lighting Design Standards.

A. The purpose of this section is to require and set minimum standards for outdoor lighting to:

1. Protect drivers and pedestrians from the glare of nonvehicular light sources.

2. Minimize light pollution, nuisance glare and stray light from poorly aimed, placed, applied or maintained light sources.

3. Conserve energy by efficiently directing light sources to the area intended to be illuminated and thereby minimizing wasted light emissions.

B. Exterior Lighting Plans. An exterior lighting plan shall be submitted concurrently with a submission for a Subdivision and Land Development Plan under Chapter 185, Subdivision and Land Development, or upon submission of a Zoning Permit application in the event that a Subdivision and Land Development Plan is not required for the project. The regulations provided under Subsection C are in addition to those lighting requirements of Chapter 185. When submitted with a Zoning Permit application, aAn exterior lighting plan shall contain the following minimum elements:

1. Detailed grid of illumination levels as measured in footcandles.

2.1. Height and location of all lighting fixtures.

2. Manufacturer's specifications, or equivalent, detailing all lighting fixtures proposed, including shielding, specifications, and mounting details and any further specifications needed by the Zoning Officer to determine full compliance with the requirements of this Section.

3. When the submission of the lighting plan is part of a land development plan, or is proposing to change lighting fixtures that were previously approved as part of a land development plan, a detailed grid of illumination levels as measured in footcandles shall be provided.

C. The following design standards for outdoor lighting shall apply to outdoor lighting installed after the effective date of this section, except that outdoor lighting depicted on subdivision plans, land development plans, zoning permit applications, or building permit applications submitted prior to the enactment of these regulations shall not be required to comply with these regulations until such time that the fixtures are replaced with new lighting elements.

1. Lamps intended to illuminate driveways, parking lots, sidewalks and walkways shall contain full-cutoff lighting units, or shall otherwise contain a series of external or internal shields that cast light downward toward the surface that the units are intended to illuminate and away from adjacent properties and public rights-of-way.

2. Illumination levels shall not exceed 1.0 footcandle onto adjoining properties or public rights-of-way, or 0.5 footcandles on any adjoining property containing a dwelling unit.

The illumination level shall be as measured horizontally on the ground surface at a given point on the receiving property.

3. Canopies and awnings. All lighting fixtures that are intended to illuminate a canopy or awning shall comply with the following requirements:

   a. All canopies Canopies and awnings shall not contain any interior illumination that is used intended to attract attention to the canopy or awning, or to the facilities to which they cover.

   b. Lamps mounted on or under canopies or awnings, shall be provided with a lamp cover that is flush with the canopy surface, or shall be recessed or flush with the bottom surface of the canopy or awning.

   c. Lamps shall not be mounted on the top or fascia of a canopy or awning, but rather shall be mounted to the building wall with the lamp aimed downward onto the awning or canopy structure.

4. Lamps used to illuminate flags, statues or any other objects mounted on a pole, pedestal or platform shall produce only a narrow beam of light for the purpose of confining the light to the object of interest.

5. The use of floodlights or spotlights for nonresidential purposes shall be prohibited. Floodlights used in residential housing areas shall be installed in a manner so that the light source is either shielded or directed downwards away from adjoining properties, so that no glare is being projected into the windows of adjoining residences, skyward or onto a public street or other public right-of-way.

6. All exterior light sources must be steady in nature, with no flashing, flickering or rotating lights permitted. Multi-colored light sources may be permitted for building accent lighting only and shall be at low intensities casted onto the building wall.

7. Exceptions. The following light sources shall not be required to comply with this Section:

   a. Single family detached, semi-detached and attached dwellings, and two-family detached dwellings; except that compliance shall be required for Subsections C(3) through C(6).

   b. Laser lights and other temporary light sources used for entertainment, decoration, or recreational purposes.

   c. Searchlights as permitted under §225-417.

   d. Emergency lighting fixtures that illuminate only during a power outage or other emergency event.

   e. Any lighting source that is mandated by State or Federal Law.

   f. Streetlights.

   g. Traffic Control Lights and Devices.

   h. Vehicle Lamps.

§225-4221. Murals/Street Art.[BW13]

A. 1. Murals and/or street art are subject to review by the Township Board of Supervisorsreview and must speak to the heritage of the community. Within thirty (30) working days after the plans are submitted to the Township, it shall determine by a majority vote of all of the members at any regular meeting or special meeting called for the purpose, whether it agrees with the decision of the desirability of the mural and that the mural is fitting and appropriate to the function and location of the structure. If the mural and/or street art is not recommended, the plans shall not be approved. If the Township approves the plans as submitted, the Township shall so indicate by returning the plans duly approved.

B. Plans must include a full color rendering of the proposed mural/street art, dimensions and location on the building.

C. The review shall follow the same path as a conditional use application; with the fee being established by the Township fee schedule and being due upon submission of the Mural/Street Art -application.

§225-4232. Alternative Energy Sources.

A. Solar Panel Arrays. Solar panels and related equipment shall be permitted in all zoning districts as an accessory use to a principal building or structure. Solar Panel Arrays as a principal use on the property shall be permitted within the C, LC and I zoning districts. All Solar Panel Arrays, whether accessory or principal uses, and shall comply with the following requirements:

1. All panels and equipment shall meet the setback requirements for a detached accessory use in accordance with the zoning district requirements where the array will be located, if the panels are accessory to the principal use., Where the panels are the a principal use to a principal use. Where the panels are the principal use of a property, except thator where the zoning district has no setback requirements for detached accessory uses, the setbacks for principal uses shall then apply.

2. To the greatest extent possible, roof-mounted solar panels and equipment shall be mounted flush with the roof line.accessory roof-mounted panels and equipment shall be mounted flush with the roof and shall not exceed existing peak roof height. If roof type or sun angle are not sufficient to permit flush mounting, panel arrays shall not exceed maximum height requirements for the zoning district in which the array will be located.

B. Wind Energy Conversion Systems. Wind energy conversion systems and related equipment shall be permitted in all zoning districts as an accessory use to a principal building or structure. Wind Energy Conversion Systems as a principal use shall be permitted within the C, LC and I zoning districts. All Wind Energy Conversion Systems, whether accessory or principal uses,, and shall comply with the following requirements:

1. All components of the wind energy conversion system, including windmill structure and associated equipment, shall meet the setback requirements for a detached accessory use in accordance with the zoning district requirements where the array will be located, if accessory to a principal use. Where the Wind Energy Conversion system is a principal use or, except that where the zoning district has no setback requirements for detached accessory uses, the setbacks for principal uses shall then apply.

2. Windmill structures shall meet the maximum height exception regulations of §225-206.I.

C. Outdoor Wood-Fired Boilers. Outdoor wood-fired boilers shall be permitted as an accessory use to a principal building or structure on all properties that are one acre or more in size and are located within the C zoning district. Design, setback, operational and stack height requirements shall complyin accordance with §78-6 of the Derry Township Open Burning Ordinance.

§225-4243. Businesses Containing Drive-through Service.

A. An Access and Circulation Plan shall be prepared to illustrate the locations and routes of parking and drive-through affiliated traffic to demonstrate that drive-through in and access lanes will not cause conflicts in the public right-of-way.

B. There shall be a Class 5 or Class 6 landscape buffer provided between the public right-of-way and any portion of the drive in-through lane, menu board, and/or service window.

C. The drive-through lane shall be identified through appropriate pavement markings to keep the lane separate from parking access aisles, to the greatest extent possible, so as not to interfere with ingress or egress through the subject property or to adjoining properties and uses.

D. Painted crosswalks or pavement surface variations shall be utilized to provide a clear and safe pedestrian access from the building to the parking areas serving the use.

§225-4254. Amusement Park Ride Height Exception. Amusement rides located in an amusement, theme or water park to be erected to a height in excess of 200 feet but no more than 350 feet subject to the following criteria:

A. The amusement ride shall be located a minimum of 1/2 of the ride height from property lines adjacent to public streets.

B. The applicant shall demonstrate to the Township Zoning Officer's satisfaction that the ride will comply with A.S.T.M. F770-15, as may be amended, Standard Practice for Ownership, Operation, Maintenance, and Inspection of Amusement Rides and Devices.

C. The applicant shall demonstrate to the Township Zoning Officer's satisfaction that the ride will accommodate the retrieval of patrons of the ride in a safe and expedient manner during emergency conditions.

D. The applicant shall demonstrate to the Township Zoning Officer's satisfaction that an amusement ride of such a height is an industry normality and is necessary to remain competitive with similar amusement, theme or water parks.

§225-426. Performance Standards for Nonresidential Uses Permitted in the HMU and PMU Zoning Districts.

All nonresidential uses permitted in the Hershey Mixed-Use and Palmdale Mixed-Use zoning districts, except those uses located within the Derry Road, Downtown Core and Southern Core Overlay Districts of the HMU zoning district, or the East Chocolate Avenue and Palmdale Future Development Area Overlay Districts of the PMU zoning district, shall comply with the following performance standards:

A. No outdoor storage of materials associated with the use shall be permitted.

B. No hours of operation, including unloading or loading of materials, shall be permitted between the hours of 9:00 PM and 7:00 AM.

C. Shipping and receiving shall be limited to postal or parcel service deliveries, no tractor-trailer deliveries shall be permitted.

D. The design of all buildings shall remain a single architectural style that is residential in appearance and that is consistent with the building materials and design of adjoining residential uses.

E. Exception. In the event that these performance standards cause any conflict with the express requirements of a Conditional Use or Special Exception Use identified in Article V of this Chapter, the requirement of the Conditional Use or Special Exception Use approval shall apply.

§225-427. Performance Standards for Nonresidential Uses Permitted in the Conservation Zoning District.

All nonresidential uses permitted in the Conservation zoning district, except agricultural uses and those uses located in the Sand Hill Road Overlay District, shall comply with the following performance standards:

A. No hours of operation, including unloading or loading of materials, shall be permitted between the hours of 9:00 PM and 7:00 AM.

B. Shipping and receiving shall be limited to postal or parcel service deliveries, no tractor-trailer deliveries shall be permitted.

C. The design of all buildings shall remain a single architectural style that is residential or agricultural in appearance and that is consistent with the building materials and design of adjoining uses.

D. Nonresidential uses shall only be permitted on lots that are conforming to the minimum lot area requirements of §225-303.

E. Requirements for Specific Uses. While permitted by-right in the Conservation Zoning District, the following uses shall comply with the requirements of the Conditional Use section in order to minimize impact and maintain character of the Conservation zoning district. Compliance with such standards shall be demonstrated to the satisfaction of the Zoning Officer at the time of application for a building and/or zoning permit.

1. Bed and Breakfast Homes shall comply with the requirements of §225-501.13.

2. Landscape and Garden Service (non-retail) shall comply with the requirements of §225-501.15.

F. Exception. In the event that these performance standards cause any conflict with the express requirements of a Conditional Use or Special Exception Use identified in Article V of this Chapter, the requirement of the Conditional Use or Special Exception Use approval shall apply.

Article V
Conditional Uses and Special Exceptions

§225-501 Specific Criteria For Conditional Uses

A. Where allowances in this Chapter have been made for conditional uses, the Township Board of Supervisors shall have final jurisdiction for the approval or denial of the conditional use.

B. An application form prescribed by the Township shall be submitted by the applicant along with a fee in an amount as established from time to time by resolution of the Township Board of Supervisors.

C. The applicant shall submit 7 paper copies and shall also provide a magnetic or optical storage device copy in the form of Tagged Image File Format format (TIFF) or Portable Document Format (PDF) files of necessary documentation of the proposed use to enable the review of such proposal by the Township. The burden of submitting adequate data to allow full evaluation of the proposal shall rest with the applicant.

D. Conditional uses shall only be granted when the minimum conditions set forth for the granting of a conditional use have been met.

E. The Township Board of Supervisors cannot waive grant variances of any of the requirements of the Zoning Ordinance when granting a conditional use, except that the supervisors can approve modification of certain requirements as cited in the Master Plan section of this Ordinance (See §225-501.58).

F. The Township Board of Supervisors may attach such reasonable conditions and safeguards as necessary to implement the purpose and goals of this Chapter and the Derry Township Comprehensive Plan, except that any such conditions shall not be related to off-site transportation and road improvements.

G. Prior to granting approval or denying a conditional use application, the proposal shall first be reviewed by the Derry Township Planning Commission and may be reviewed by the Dauphin County Planning Commission. Furthermore, a minimum of one public hearing shall be held by the Township Board of Supervisors pursuant to public notice, as required by the Pennsylvania Municipalities Planning Code. In addition, notice of said public hearing shall be conspicuously posted, by the Township, at least one week prior to the date of hearing at points deemed sufficient by the Township along the perimeter of the lot which is the subject of the conditional use request. Written notice of a hearing shall also be sent by regular mail to the owners of land which abuts the lot which is the subject of the conditional use request at least one week prior to the date of hearing.

H. The Township Board of Supervisors shall render a written decision or, when no decision is called for, make written findings on the conditional use request within 45 days after the last hearing before the Township Board of Supervisors is concluded.

I. The grant of approval of a conditional use shall not relieve the applicant from filing and having the Township approve any land development, subdivision or site plan which may be required by other Township regulations or from otherwise complying with all applicable Township regulations.

J. Unless specifically authorized by the Township Board of Supervisors, the grant of a conditional use shall expire if a zoning permit, building permit, or certificate of use and occupancy is not obtained within 12 months from the date of the grant of the conditional use. If the grant of a conditional use requires the processing of a subdivision or land development plan, then the grant of a conditional use shall expire if a zoning permit, building permit, or

certificate of use and occupancy is not obtained within 24 months from the date of the grant of the conditional use. However, the Township Board of Supervisors, in its decision, may grant a greater period of time.

K. In addition to the minimum conditions contained in the performance standards of each conditional use, the applicant must demonstrate that the following conditions have been addressed to the maximum extent applicable:

1. The Township Board of Supervisors shall find that the use will not adversely affect the health or safety of residents in the neighborhood or district in which the use is located.

2. The Township Board of Supervisors shall find that the use will not overburden existing public services, including water, sanitary sewer, public roads, storm drainage or other public improvements.

3. The Township Board of Supervisors shall find that the use will not be detrimental to the use or development of, or change the essential character of, the neighborhood or district in which the use is proposed. The Township Board of Supervisors shall consider, at a minimum, the impact of noise, dust, light, odor and adequacy of parking.

4. The use shall meet all other requirements of this Chapter that may apply.

§225-501.1. Single Family Conversion. (R-2, R-3, PMU & HMU zoning districts)

A. A maximum of two dwelling units per existing principal structure, per lot, shall be permitted.

B. The property must support the required number of off-street parking spaces for each dwelling unit.

C. Applicants proposing to convert dwelling unit(s) on properties relying on on-site sewage disposal systems shall be required to modify the existing on-site sewage disposal system, or to install a new on-site sewage disposal system, to accommodate additional sewage flow from the additional dwelling unit(s), unless the applicant can demonstrate that the existing on-site sewage disposal system is adequate to accommodate the additional flows from the additional dwelling unit(s).

D. Applicants proposing to convert dwelling unit(s) on properties relying on public utilities shall provide individual service lines for each dwelling unit consistent withwhere required by the standards, rules and regulation of the service provider.

E. The density limitation of the underlying zoning district shall not be applicable, but all other dimensional requirements shall be satisfied.

§225-501.2. Multifamily Apartment Dwelling. (PCN, PCW, & HMU zoning districts)

A. A maximum of eight dwelling units per structure shall be proposed, except in the Downtown Core Overlay where a maximum of _____ dwelling units per structure shall be proposed.

B. The density of the development shall not exceed four dwelling units per acre, except in the Downtown Core Overlay district where the density shall not exceed a maximum of ___ dwelling units per acre .

C.A. Multifamily apartment dwellings must be served by public water and sewer facilities.

B. Multifamily apartment dwellings are only permitted as a part of a master planned plan development area.

D.C. In the Downtown Core Overlay, multifamily apartment dwellings shall only be permitted as part of a mixed-use building.

§225-501.3. Single-Family Attached Dwellings (Townhouses). (HMU zoning district).

Bed and Breakfast Home.

A. Single-family attached dwellings shall not be permitted in the Downtown Core Overlay zoning district.

B. Density shall not exceed eightsix (86) dwelling units per acre, with no more than six (6) dwelling units being permitted in a single building.

A. **To maintain consistency between established and proposed development, parking on the lot shall not be located between the front facade and front lot line.**

B. **No more than 5 bedrooms may be available or used for such use in any building.**

C. **Not more than 1 ground sign or 1 wall sign shall be permitted on the lot meeting the dimensional requirements of the sign overlay district to which the proposed bed and breakfast is located.**

D. **Meal service shall be limited to breakfast only to overnight guests of the facility.**

E. **All off-street parking spaces shall be provided on the lot. The number of off-street parking and loading spaces shall be provided as defined by this Chapter. All parking spaces and driveways shall be surfaced with bituminous, brick, concrete or stone block paving material.**

F. **The owner and/or manager of the facility shall reside therein.**

G. **An overnight guest shall not occupy the facility for more than fourteen (14) consecutive nights in a thirty (30)-day period.**

§225-501.4. Single Family Detached Dwelling and Single Family Semidetached Dwellings. (PCW zoning district)

A. Single family detached dwellings and single family semidetached dwellings shall only be permitted in an area being development as part of a Master Plan requirements of §225- development area in the Planned Campus West Future Development Overlay Area.

B. Single family detached dwellings and single family semidetached dwellings shall not occupy more than 40% of the total land area being developed as part of the master plan development and no more than 60% of the total dwelling units proposed as part of the master plan development.

§225-501.5. Mobile Home Park. (R-3 zoning district)

A. General site standard. The conditions of the soil, ground, water level, drainage and topography shall not create hazards to the health, safety or property of park occupants or visitors, nor shall the site be exposed to objectionable smoke, noise, odors or other adverse influences.

1. No park or any site which is subject to flooding, subsidence or erosion shall be used for any purpose which would expose persons or property to hazards.

2. The ground surface in all parts of every site shall be graded and equipped to drain all surface water in a safe, efficient manner.

3. Exposed ground surfaces in all parts of every site shall be paved or protected with a vegetative growth that is capable of preventing soil erosion and of eliminating objectionable dust.

B. General park standards.

1. Minimum site area shall be 10 acres.

2. No part of any mobile home park shall be used for any purpose other than for the location of mobile home park lots, park recreation facilities, open space, service and utility facilities, access drives and parking facilities.

3. A landscaped buffer of 25 feet in width shall be provided along the perimeter of a mobile home park which meets the following specifications:

a. Natural woodlands shall be preserved and shall be supplemented with at least 15 evergreen trees or shrubs of at least three feet in height per 100 feet of perimeter, if they do not naturally exist.

b. If not wooded, grass mounds at least three feet, but not higher than seven feet, shall be created and planted with shade trees, evergreen trees and shrubs and deciduous shrubs. There shall be at least two shade trees per 75 feet of buffer perimeter, five evergreen trees per 100 feet of buffer perimeter, and at least 25 shrubs per 100 feet of buffer perimeter, 50% of which shall be evergreen. Shade trees shall have a minimum trunk diameter of 2 1/2 inches at breast height, evergreen trees shall be at least eight feet tall and shrubs shall be at least three feet in height.

4. Park design standards, including public or private street construction, shall be in accordance with Chapter 185, Subdivision and Land Development, except as noted in the following sections.

C. Park street standards. Park streets may be privately owned in parks where lots are rented or leased, but shall have at least two safe, convenient vehicular access points to a public street. Such entrance way shall be designed to minimize congestion and hazards for park traffic and through traffic on the public street.

D. Park walkway and sidewalk standards; individual walks. All mobile home stands shall be connected to the sidewalks. Such individual walks shall have a minimum width of four feet and be constructed of concrete.

E. General parking standards.

1. Off-street parking facilities shall be provided to lessen congestion in the streets.

2. Each mobile home park lot shall contain off-street parking spaces at the rate of two spaces per mobile home.

3. Parking spaces shall be laid out and constructed in accordance with the provisions of §225-401402 as it pertains to single-family detached dwellings.

F. Mobile home park lots. Every mobile home park lot shall have access from a street.

1. On land laid out as a mobile home park, the lots shall be not less than 60 feet wide nor less than 6,000 square feet in area per mobile home unit, exclusive of streets and other public or common areas.

2. Each mobile home park shall have a mobile home stand, which provides an adequate foundation for the placement of a mobile home, and for securing the structure from uplift, sliding, rotation, settling or vibration.

3. Mobile home lots which are to be sold by fee-simple title, as opposed to those rented or leased, shall each have a minimum frontage of 60 feet on a public street.

G. Mobile home park yard area requirements. The minimum yard area from the lot lines shall be as follows:

1. Principal structure:

a. Front: 25 feet.

b. Side: 12 feet.

c. Rear: 25 feet.

2. Accessory structure:

a. Front: 50 feet.

b. Side: 5 feet.

c. Rear: 10 feet.

H. Open space and recreation facilities standards.

1. Not less than 20% of the land area of every mobile home park shall be used to provide common open space and recreation facilities for the residents and guests of the park.

2. A portion of such open space shall be prepared or improved, and maintained, to provide one or more outdoor play lot and playground facilities or indoor recreation facilities.

3. Recreation facilities shall be located so as to be accessible to all park residents.

I. Water supply standards. Mobile home parks shall be served by a public water supply system in accordance with the prevailing standards of Chapter 185, Subdivision and Land Development.

J. Fire hydrants.

1. Fire hydrants shall be installed in accordance with the prevailing design and construction standards of Chapter **185**, Subdivision and Land Development.

2. All mobile homes, service buildings or other structures in the park shall be located within 400 feet of a fire hydrant measured along a street.

K. Sanitary sewage facilities standards.

1. Mobile home parks shall be served by a public sanitary sewage collection system.

2. Sewer collection system. Plans and specifications for the system shall be acceptable to the Pennsylvania Department of Environmental Protection, and shall be in accordance

with the prevailing design and construction specifications of Derry Township Municipal Authority.

L. Electric power distribution standards.

1. Every park shall contain an electrical wiring system consisting of wiring, fixtures, equipment and appurtenances, which shall be installed and maintained in accordance with local electric power company specifications regulating such systems.

2. Individual electrical connections. Each mobile home park lot shall be provided with an approved disconnecting device and over-current protective equipment. The minimum service per outlet shall be 120/240 volts AC, 100 amperes.

M. Liquefied petroleum gas system standards.

1. Liquefied petroleum gas systems provided for mobile homes, service buildings or other structures when installed shall be maintained in conformity with accepted engineering practices, standards of the supplying or installing company.

2. System shall be provided with safety devices to relieve excessive pressures and shall be arranged so that the discharge terminates at a safe location.

3. Systems shall have at least one accessible means for shutting off gas for each mobile home. Such means shall be located outside the mobile home and shall be maintained in effective operating condition.

4. All LPG piping outside of the mobile homes shall be well supported and protected against mechanical injury. Undiluted liquefied petroleum gas in liquid form shall not be conveyed through piping equipment and systems in mobile homes.

5. Containment vessels of no more than 60 gallons gross capacity may be installed on a mobile home stand and shall be securely, but not permanently, fastened to prevent accidental overturning.

6. No LPG vessel shall be stored or located inside or beneath any storage cabinet, carport, mobile home or any other structure.

N. Fuel oil supply system standards. All fuel oil supply systems provided for mobile homes, service buildings and other structures shall be installed and maintained in conformity with the Derry Township Building Code.

O. Standards for individual mobile homes.

1. All mobile homes must meet the minimum standards for room sizes in a dwelling unit as cited in Chapter 143 of the Township Code.

2. An enclosure of compatible design and material commonly called skirting shall be erected around the entire base of the mobile home. Such enclosure shall provide sufficient ventilation to inhibit decay and deterioration of the mobile home.

3. All mobile homes must be provided with a patio of a minimum size of 10 feet by 10 feet.

4. All mobile homes shall be anchored in the manner prescribed by the manufacturer.

5. Minimum gradient of the mobile home pad shall be one foot above mean grade.

§225-501.6. Automotive Car Wash/Lubrication Facilities. (PMU, HMU & PCW zoning districts)

A. No overnight parking of vehicles will occur.

B. No inoperable or unlicensed vehicles will be stored on the property for any length of time.

C. No outdoor storage of equipment or materials will occur.

D. The facility shall not consist of more than two wash bays.

E. Buildings in which the car wash facilities are located must be located no closer than 200 feet to a building used as a dwelling which exists at the time of the establishment of the facility.

F. All washing shall occur in a covered structure having walls on at least 50% of its perimeter enclosed by permanent walls.

G. A maximum of two vacuum cleaners may be located outside the covered wash structure.

H. No outdoor storage of equipment or materials will occur.

I. All work must be performed in an enclosed building, with the exception of road tests necessary for Pennsylvania state inspection services.

J. Buildings in which the use are located must be located no closer than 200 feet to a building used as a dwelling which exists at the time of the establishment of the automotive lubrication facility.

§225-501.7. Cigar, Hookah, and/or Vapor Lounge. (GC zoning district)

A. Daily hours of operation shall be a maximum of 10:00am to 11:00pm.

B. All activities of the business/facility shall take place indoors.

C. The land use shall be a minimum of 500 feet from the following:

1. Schools or day cares
2. Parks or recreation facilities
3. Places of worship
4. Another Cigar, Hookah, and/or Vapor Lounge
5. Sexually Oriented Businesses
6. Archery & Shooting Ranges, Indoor and/or Outdoor

§225-501.8. Commercial Parking Lot or Structure. (PCM & MCC zoning districts)

A. Lighting shall not exceed 50% power or intensity between the hours of 10:00pm and 5:00am unless just cause can be provided that doing so would jeopardize the safety of the users. In lieu of meeting this requirement, the facility may install motion sensor lighting.

B. A commercial parking lot or structure shall be screened with a Class 1 or Class 2 landscape buffer along the public road right-of-way.

§225-501.9. Food Service With a Drive-Through. (PCW zoning district)

A. Drive-through lanes shall meet the requirements of §225-4243.

B. Maintenance and service areas shall not be located between the front lot line and the drive-through

§225-501.10. Winery. (C & CR zoning districts)

A. A winery shall be located on premises used for agricultural purposes.

B. At least 50% of the fruit used in connection with the processing of wine shall be grown on the premises. The remaining fruit may be grown and/or purchased off-site.

C. The winery may include a tasting room, subject to the requirements of this Chapter.

D. Structures and outdoor use areas associated with a winery shall comply with the setbacks of the zoning district.

E. Access/Street Addressing.
   1. Ingress and egress shall be clearly marked and visible, and turning movements into the premises shall not create congestion or unnecessary slowing at access points.
   2. Existing driveways shall be utilized to the maximum extent feasible in order to minimize grading, site disturbance, and the loss of agricultural land.

F. Parking.
   1. The number, size, location, and design of required parking spaces shall comply with the standards of this Chapter.
   2. The visibility of parking areas associated with the winery from public roads shall be minimized through the use of a landscape buffer designed in accordance with Class 1 through Class 6 as appropriate.
   3. The required number of parking spaces shall be permanently maintained on the winery premises. The Township may modify the number of required spaces based on site-specific considerations. Oversize parking spaces to accommodate bus/limousine parking is only required for wineries that are open to the public.
   4. Parking shall not be allowed within an adjoining road right-of-way, unless on-street parking is otherwise permitted.
   5. Chip seal, or gravel parking surfaces are permitted for 50% of the required parking areas, however they shall be marked by the use of wheel stop barriers made of concrete, timber, recycled plastic or other durable material, that are securely installed and fastened to the parking surface. These standards shall not apply to overflow parking provided in open field areas. The Township reserves the right to consider the appropriate placement for parking in context of factors including, but not limited to, topography, existing and/or proposed landscaping/bufferyards, site access, building(s) location, and/or site lighting.

G. Process Waste Disposal.
   1. A winery vegetative waste management plan shall be submitted for review and approval by the Township. The plan shall include a green waste reduction program that includes the disposal of stems, leaves, and skins of grapes by drying, spreading, and disking the waste into the soil on the winery premises or approved property. Pomace may be used as fertilizer or as a soil amendment provided that the use or other disposal shall occur in compliance with applicable standards.
   2. Liquid waste (process wastewater) from the winery operation shall be handled separately from domestic liquid waste and shall be in compliance with applicable discharge requirements[CWE14].

H. Accessory uses.

   1. Tasting Rooms. Tasting rooms shall be clearly incidental, accessory, and subordinate to the primary operation of the associated winery as a production facility and are subject to

the following requirements:

a. The location of the tasting room shall take into consideration site constraints, onsite access, visual concerns, grading and other environmental issues.
b. The primary focus of the tasting room shall be the marketing and sale of the wine produced on the winery premises. Sales of souvenirs and clothing bearing the logo of the winery, as well as wine related items and other products that reflect or enhance the character or theme of the winery may also be offered for sale in the tasting room.
c. If more than one winemaker shares production facilities or more than one winery is located on a winery premises, only one tasting room is allowed. More than one winemaker or winery facility may share a tasting room.

2. Operation of a brewery or brewery pub as may be permitted by the Pennsylvania Liquor Control Board including the accessory storage and retail sale, of malt, brewed or similar beverages, and commonly associated items.

3. The retail sale of cheeses, fruits, meats, chocolates, and other culinary items and specialty agricultural food products, and other culinary items typically paired with wine or beer, but which do not involve the use of an onsite commercial kitchen to prepare, is permitted.

4. Special events, including, but not limited to, weddings, workshops, corporate events, concerts, and organizational picnics, are permitted, consistent with the following:

a. Indoor special events are permitted provided they are held in a building which shall contain no more than 2,500 square feet dedicated to public use, including areas used for retail sales. The maximum allowed attendance will be in accordance with the maximum occupancy requirements for the building in which the event is conducted.
b. Outdoor special events, including those held under tents or other temporary structures are only permitted on a winery containing a vineyard of not less than five acres.
c. Special event are permitted to operate between the hours of 8:00 a.m. to 1011:00 p.m.
d. Adequate parking, in terms of size, locations and surface material shall be provided.
e. Lighting may be used for special events for the duration of the event only and may not shine or produce glare on adjacent properties or streets.
f. Alcoholic beverages produced at the winery, nonalcoholic beverages, and catered food may be served at the special event.
g. Overflow parking areas may be on grass surface areas of the lot. Driveways from permanent parking areas to overflow parking areas shall have a gravel tire cleaning area having a minimum length of 50 feet. The grass surface area which is to be used for overflow parking shall be kept in suitable grass cover and shall not be allowed to degrade to an erodible or condition. If the surface of any portion of the overflow parking area is disturbed, the areas shall be reseeded or planted with sod to ensure the area remains grass surface. Such planting shall occur within one week after the special event has ended. Overflow parking areas shall be enclosed by a temporary barrier fence to prevent the flow of traffic across property lines, all such fences shall be removed within one week of a special event ending. Overflow parking areas shall be set back at least 25 feet from side and rear property lines.
h. Adequate and appropriate sewage disposal shall be provided for special events.
i. All waste, trash and rubbish, tents and temporary structures, and any other displays or exhibits that resulted from the special event shall be removed from the property within 48 hours after the special event has ended.

I. Application Requirements. The application for a winery facility shall include, but shall not be limited to:
   1. The range of activities occurring onsite directly related to wine production (e.g., crushing, fermentation, barrel aging, bottling, bottle storage, shipping and receiving) accompanied by a site plan that provides a description of where the different winery processes will occur on the site.
   2. Production capacity, existing, and proposed.
   3. The type of cooperage used in fermentation.
   4. Origin of grapes used in the wine production (e.g., percent of grapes produced onsite, percent of grapes imported from off-site).
   5. The area (existing and proposed) of structures, parking, roads, and driveways, uncovered processing areas, vineyard, and other planted areas.
   6. A description of measures proposed to minimize the off-site effects of dust, odor, or noise generated by the proposed winery operation.
   7. Information regarding proposed public tours and wine tasting, retail wine sales, other retail sales including food service, and picnic areas available to the public.
   8. Information regarding any planned permitted accessory use as listed in this Section.

J. To preserve the character of established surrounding development and landscapes, new structures associated with the winery including production facilities and exterior changes to existing structures associated with the winery shall be subject to review and approval by the Township in accordance with the following standards:
   1. Exterior: The design, scale, and character of the winery shall be compatible with existing development in the vicinity. Structures associated with the winery including production facilities shall have an exterior that is agricultural or residential in nature using earth tones and non-reflective paints, siding, and roofing materials. Structures shall not use an exterior design style typically associated with large industrial facilities.
   2. Screening: The visibility of winery operations from public roads shall be minimized through the use of landscaping and other screening devices to ensure that the character of the area is retained. Tanks not located within a structure shall be completely screened from public roads.
   3. Height: The height of a structure associated with a winery facility shall be limited to the height of that zoning district.
   4. Lighting: Exterior lighting fixtures shall be of a low intensity, low glare design and shall be shielded with full cutoff design and directed downward to prevent spill over onto adjacent lots under separate ownership. Exterior lighting shall not be installed or operated in a manner that would project light, either reflected or directly, in an upward direction.

§225-501.11. Food Catering. (PMU, HMU & PCW zoning districts)

A. Ample space shall be provided on-site for the loading/unloading activities as well as parking for delivery vehicles, employees and visitors.

B. Doors associated with loading/unloading shall be screened from the adjacent right-of-way to the maximum extent possible.

C. Measures shall be provided to minimize the off-site effects of dust, odor from cooking and trash, or noise generated by the food catering service.

§225-501.12. Guest Lodging, Dining and Conference Facilities. (MCC zoning district)

A. Specific uses allowed as free-standing facilities in the Medical Center Campus zoning district are as follows:

   1. Guest lodging facilities, similar in nature to hotel/motel accommodations.

   2. Dining facilities for food service for lodging guests or conference attendees.

3. Teaching and educational conference facilities.

B. Specific standards.

1. Such facilities must be restricted for use exclusively by those associated with the Penn State Milton S. Hershey Medical Center.

2. Parking for lodging facilities shall be provided in accordance with §225-401402, with the number of spaces determined in accordance with standards applicable to "hotel/motel."

3. Parking for teaching or conference facilities shall be provided at the rate of one space for every two seats.

§225-501.13. Bed and Breakfast Home. (R-1 zoning district)

A. To maintain consistency between established and proposed development, parking on the lot shall not be located between the front building facade and front lot line.

B. No more than 5 bedrooms may be available or used for such use in any building.

C. Signage shall be limited on the lot to one ground sign or one wall or projecting sign meeting the dimensional requirements of the applicable sign overlay district..

D. Meal service shall be limited to breakfast only to overnight guests of the facility.

E. All off-street parking spaces shall be provided on the lot. The number of off-street parking and loading spaces shall be provided as defined by this Chapter. All parking spaces and driveways shall be surfaced with bituminous, brick, concrete or stone block paving material.

F. The owner and/or manager of the facility shall reside therein.

G. An overnight guest shall not occupy the facility for more than fourteen (14) consecutive nights in a thirty (30)-day period.

Reserved.

§225-501.14. Heliport. (MCC & I zoning districts)

A. The applicant shall submit evidence confirming that the heliport will be constructed, operated and maintained in accordance with the applicable rules and regulations of the Federal Aviation Administration and the Pennsylvania Department of Transportation relating to the use of heliports.

B. The application shall include, at a minimum, the following information:

1. A copy of the Federal Aviation Administration Form 7480-1, "Notice of Landing Area Proposal."

2. A copy of a letter of "No Objections" from the FAA.

3. A copy of Commonwealth of Pennsylvania Application for Approval of a Landing Site, AV-4, and necessary supplemental information or equivalent and the letter of site approval from the PennDOT, Bureau of Aviation.

4. An aerial photograph or drawing, either of which shall be at a scale no less than one inch equals 200 feet, indicating the approach and departure routes, the location of all residents, schools, places of worship, hospitals and areas used for the open

assembly of people as well as other noise sensitive areas within a radius of 1/2 mile of the proposed heliport site.

5. A description of the facility, outlining its proposed hours of operation and proposed support facilities (hangar, fuel storage, etc.).

6. A site plan and corresponding narrative which shall contain the following information:

   a. The location, nature and height of proposed security fences, berms, landscaping and other security and noise attenuation structures.

   b. The location and type of fire-fighting equipment and materials.

   c. The location and type of fuel storage facilities.

   d. The location of all existing and proposed buildings.

   e. The location of the helicopter takeoff and landing areas and parking areas.

C. The heliport shall be located a minimum of 1,000 feet from any dwelling unit located on another lot.

D. The Township Board of Supervisors shall find that the heliport will not be detrimental to the use or development of or change the essential character of any area of this or surrounding municipalities.

E. The applicant shall demonstrate that adequate off-street parking and loading and unloading facilities will be provided to meet the needs of the proposed use.

F. The Township Board of Supervisors shall find that the use would not adversely affect the health or safety of persons in or surrounding Derry Township the Township.

G. The applicant shall demonstrate that there is a public or private need for such a facility in Derry Township the Township.

§225-501.15. Landscaping & Garden Center – Non-retail/ Retail. (Non-retail in the PCN zoning district and retail in the PMU, HMU & PCW zoning districts).

A. All vehicles and equipment associated with the business shall be parked in an enclosed building, or to the rear of the building, or screened from view by a fence or hedge row during off business hours.

B. Pick-up and receiving (loading and unloading) areas shall contain an all-weather, dust free surface.

C. Pick-up and receiving areas shall be located behind the front face of the building and otherwise compliant with the setbacks and screening of the underlying zoning district.

D. Fenced-in areas shall contain a non-chainlink variety fence complying with §225-407.

E. Outdoor storage of product and material is specifically permitted as a part of a non-retail or retail landscaping & garden center, however these areas shall be screened[BJW15] with a Class 1 or Class 2 landscape buffer from public roads and adjacent residential uses. from public roads and adjacent residential areas.

§225-501.16. Membership Club. (PMU, HMU & PCW zoning districts).

A. Off-street parking and loading and unloading facilities shall be provided in accordance with the provisions of §225-401402.

B. Outdoor activity areas shall meet the yard area requirement of the zoning district in which the use is operated.

§225-501.17. Private Parking Lot or Structure. (PCN & MCC zoning districts)

A. When the use is established as a principal use on a lot, wither associated with another principal use or merely as a parking facility a shuttle service or a complete pedestrian network shall be provided as necessary to ensure safety of pedestrians traveling off-site to other destinations.

B. Lighting shall not exceed 50% power or intensity between the hours of 10:00pm and 5:00am unless just cause can be provided that doing so would jeopardize the safety of the users. In lieu of meeting this requirement, the facility may install motion sensor lighting.

C. A private parking lot or structure shall be screened with a Class 1 or Class 2 landscape buffer along the public road right-of-way.

Reserved.

§225-501.18. Fuel Service – Minor. (PMU, HMU & PCW zoning districts)

Private Parking Lot or Structure

A. Within the PMU zoning district, minor Fuel Service establishments shall only be permitted within the Palmdale Chocolate Avenue Overlay.

B. Within the HMU zoning district, minor Fuel Service establishments shall only be permitted within the Southern Core Overlay.

C. Within the PCW zoning district, minor Fuel Service establishments shall only be permitted as part of a Master Plan development area.

D. Pump areas, including canopies, and any other accessory structure shall only be located between the front facade of any principal structure on the lot and the rear setback line. On corner lots, the pump areas, including canopies, and any other accessory structure shall not extend closer to the secondary frontage than the face of the associated principal structure.

E. No more than 8 vehicles shall be permitted to be serviced by fueling devices at any given time.

F. Fuel Canopies and their support structure shall not contain interior illumination that is used to attract attention to the canopy.

G. Fuel service establishments adjacent to residential uses shall provide a landscape buffer consistent with this Chapter.

H. A maximum of two vacuum stations and one tire air station shall be permitted.

I. No outdoor storage of equipment or materials is permitted.

J. Buildings and structures associated with a fuel service establishment must be located no closer than 200 feet to a building used as a dwelling which exists at the time of the establishment of the facility.

A. **When the use is established as a principal use on a lot, wither associated with another principal use or merely as a parking facility a shuttle service or a complete pedestrian network shall be provided as necessary to ensure safety of pedestrians traveling off-site to other destinations.**

B. **Lighting shall not exceed 50% power or intensity between the hours of 10:00pm and 5:00am unless just cause can be provided that doing so would jeopardize the safety of the users. In lieu of meeting this requirement, the facility may install motion sensor lighting.**

C. **A private parking lot or structure shall be screened with a Class 1 or Class 2 landscape buffer along the public road right-of-way.**

§225-501.19. Fuel Service – Minor/Major. (HMU zoning district).

A. Within the HMU zoning district, major Fuel Service establishments shall only be permitted in the Southern Core Overlay zoning district.

A.B. Pump areas, including canopies, and any other accessory structure shall only be located between the front facade of any principal structure on the lot and the rear setback line. On corner lots, the pump areas, including canopies, and any other accessory structure shall not extend closer to the secondary frontage than the face of the associated principal structure.

B.C. Fuel Canopies and their support structure shall not contain interior illumination that is used to attract attention to the canopy.

C.D. Canopies serving more than 8 vehicles must provide a visual break in canopy size or projection to avoid the overly simplified, unarticulated or commercial look of longer canopies.

D.E. Fuel service establishments adjacent to residential uses shall provide a landscape buffer consistent with this Chapter.

E. A maximum of two vacuum stations and one tire air station shall be permitted.

F. No outdoor storage of equipment or materials is permitted.

G. Buildings and structures associated with a fuel service establishment must be located no closer than 200 feet to a building used as a dwelling which exists at the time of the establishment of the facility.

§225-501.20. Specialty Home. (GC, PMU & HMU zoning districts)

A. Within the HMU zoning district, specialty homes shall only be permitted within the Downtown Core Overlay zoning district.

B. Within the PMU zoning district, specialty homes shall only be permitted within the Palmdale Chocolate Avenue Overlay zoning district.

A.C. Specialty homes are only permitted in buildings where the existing or prior approved use was a habitable dwelling.

B.D. A specialty home must be a minimum of 25’ from any other dwelling unit.

C.E. On street parking is prohibited. Two off-street parking spaces are required, plus one additional off-street parking space per bedroom, after the first two bedrooms. Parking surfaces must be improved be constructed of asphalt, concrete, brick, paver blocks or cobblestone on a six-inch stone base. Parking spaces shall be delineated by painted lines having a minimum width of four inches.

D.F. The exterior of the specialty home must maintain a residential appearance.

E.G. Noise and disturbance must be comparable to typical residential uses.

F.H. Special events and public functions such as concerts, conferences or weddings are prohibited on the lot of a specialty home.

G.I. Access to the property must be maintained and remain clear of obstructions to accommodate emergency vehicles.

H.J. Signage is limited to a one square foot nameplate, excluding and any signage identifying street address of the property.

I.K. Regardless of the number of dwellings on a property, there may only be one contract for rent at any given time.

L. The owner/operator must provide the name and 24-hour contact phone number of the person responsible for the security and maintenance of the property to the Township Department of Community Development and the Township Police Department. The contact phone number must also be posted in a visible, but discreet location on the property.

J.

K. The emergency information must also be posted in a visible, but discreet location on the property.

§225-501.21. Recreational, Sports & Entertainment Facilities - Arboretums & Botanical Gardens. (C zoning district).

A. Areas associated with maintenance and storage of material shall be screened and secured from public view and access.

B. Accessory uses.

1. The retail sale of plants, garden ornaments and associated products.

2. Special events, including, but not limited to, weddings, workshops, corporate events, concerts, and organizational picnics consistent with the following:

a. Indoor special events are permitted provided they are held in a building which shall contain no more than 2,500 square feet dedicated to public use, including areas used for retail sales. The maximum allowed attendance will be in accordance with the maximum occupancy requirements for the building in which the event is conducted.

b. Outdoor special events, including those held under tents or other temporary structures.

c. Special event are permitted to operate between the hours of 8:00 a.m. to 10:00 p.m.

d. Adequate parking, in terms of size, locations and surface material shall be provided.

e. Lighting may be used for special events for the duration of the event only and may not shine or produce glare on adjacent properties.

f. Catered food and beverages may be served at the special event.

g. Overflow parking areas may be on grass surface areas of the lot. Driveways from permanent parking areas to overflow parking areas shall have a gravel tire cleaning area having a minimum length of 50 feet. The grass surface area which is to be used for overflow parking shall be kept in suitable grass cover and shall not be allowed to degrade to an erodible or condition. If the surface of any portion of the overflow parking area is disturbed, the areas shall be reseeded or planted with sod to ensure the area remains grass surface. Such planting shall occur within one week after the special event has ended. Overflow parking areas shall be enclosed by a temporary barrier fence to prevent the flow of traffic across property lines, all such fences shall be removed within one week of a special event ending. Overflow parking areas shall be set back at least 25 feet from side and rear property lines.

h. Adequate and appropriate sewage disposal shall be provided for special events.

i. All waste, trash and rubbish, tents and temporary structures, and any other displays or exhibits that resulted from the special event shall be removed from the property within 48 hours after the special event has ended.

§225-501.22. Recreational, Sports & Entertainment Facilities – Indoor Archery & Shooting Ranges. , Indoor(C, PCN and LC zoning districts).

A. The building and method of operation shall conform to any applicable Commonwealth of Pennsylvania, Environmental Protection Agency, and OSHA standards for indoor ventilation, emission into the atmosphere, and lead management.

B. The design and construction of the shooting range shall completely confine all ammunition rounds and projectiles within the building and in a controlled manner.

C. The design and construction of the shooting range shall be certified by a registered architect or engineer in the State of Pennsylvania.

1. The certified plans shall include the specification and construction of the bullet trap(s), ceilings, exterior and interior walls and floors.

2. The certified plans shall state what type and caliber of ammunition the shooting range is designed to totally confine.

3. A security plan for the building shall be submitted which secures the shooting range against unauthorized entrants.

D. No ammunition shall be used in the shooting range that exceeds the certified design and construction specifications of the shooting range.

E. For shooting ranges that are other than used for recreational purpose, firearms shall not be stored on the premises when the shooting range is closed for business, unless they are stored in an acceptable gun safe or other secure locking device.

F. On-site supervision shall be supplied at all times by an adult who is an experienced shooting range operator. The shooting range operator shall be responsible for the conduct of his or her place of business and the conditions of safety and order in the place of business and on the premises.

G. Each shooting range shall have a clear and concise safety plan. The plan must be reviewed annually and distributed to all shooting range users to study and use.

H. Minors shall not be allowed in the shooting range unless accompanied by an adult at all times. This provision shall not be interpreted to prohibit minors from participating in a firearm safety class which is supervised by an adult instructor.

I. In multitenant buildings, the shooting range shall be soundproofed to prevent the sound from being heard by persons in adjoining units.

J. The applicant shall have the burden to demonstrate that the shooting range is designed to promote the safety of all persons on the premises or on abutting property when the shooting range is being used. The applicant may meet its burden by showing compliance with applicable National Rifle Association, Commonwealth of Pennsylvania or other generally recognized guidelines for shooting range design and safety or by submitting evidence from persons with experience and expertise in shooting range design and safety.

§225-501.23. Recreational, Sports & Entertainment Facilities – Outdoor Archery and/or Shooting Ranges, Outdoor. (PCN and LC zoning districts).

A. The building, grounds and method of operation shall conform to any applicable Federal, State and local standards for operation of an outdoor range including requirements for safety, noise abatement, lead and other waste management.

B. The design and construction of the range shall completely confine all projectiles and ammunition rounds within the site and in a controlled manner.

C. The design and construction of the range shall be certified by an architect or engineer registered in the State of Pennsylvania.

1. The certified plans shall include the specification and construction of the bullet trap(s), archery areas, backstops, storage buildings and other amenities.

2. If applicable, the certified plans shall state what type and caliber of ammunition the shooting range is designed to totally confine.

3. A security plan for site, any buildings and/or storage areas shall be submitted which secures the range against unauthorized entrants.

D. No ammunition shall be used in the shooting range that exceeds the certified design and construction specifications of the shooting range.

E. Firearms shall not be stored on the premises when the shooting range is closed for business, unless they are stored in locked gun safes or other secure locking device.

F. On-site supervision shall be supplied at all times by an adult who is an experienced range operator. The range operator shall be responsible for the conduct of patrons, safety, and order at his or her place of business.

G. Each range shall have a clear and concise safety plan. The plan must be reviewed annually and distributed to all range users to study and use.

H. Minors shall not be allowed in the range unless accompanied by an adult at all times. This provision shall not be interpreted to prohibit minors from participating in a firearm safety class which is supervised by an adult instructor.

I. All outdoor shooting ranges shall be a minimum of 1000 feet from any occupied structure existing at the time of the establishment of the shooting range. This isolation dimension may be reduced to 600 feet for any range restricted to archery use.

J. The applicant shall have the burden to demonstrate that the range is designed to promote the safety of all persons on the premises or on abutting property when the range is being used. The applicant may meet its burden by showing compliance with applicable National Rifle Association or other generally recognized guidelines for range design and safety or by submitting evidence from persons with experience and expertise in range design and safety.

§225-501.24. Recreational, Sports & Entertainment Facilities - Bowling Alleys. (PCW zoning district).

A. Any structure containing a street fronting façade wall of more than 100 horizontal feet shall provide horizontal and vertical breaks in the building to reduce the appearance of a long flat building face. Any structure exceeding 100 feet of front façade shall provide horizontal and vertical breaks in the building face to reduce the appearance of a long flat building face.

A. In facilities offering gathering spaces, additional parking for the maximum number of patrons permissible at parties, tournaments and other special events, shall be provided at a ratio of 1 space per 2 guests in addition to the base parking requirements.

B. Bowling alleys shall only be permitted as part of a Master Plan development area.

§225-501.25. Recreational, Sports & Entertainment Facilities - Casinos and Gambling Facilities. (CR & LC zoning districts).

A. In addition to the requirements of this Ordinance, the use shall comply with the provisions of Commonwealth of Pennsylvania.

B. Parking for concerts, restaurants and other activities associated with this use shall be identified on the plan. Parking for said uses shall be provided in a minimum quantity to allow for the largest seating venue to have 1 space for each 2 seats. When bus parking is provided on the site, the automobile parking spaces may be reduced at a ratio of 15 car spaces:1 bus space. Bus area parking and circulation shall not conflict with automobile circulation and spaces. Bus parking areas shall be provided a Class 1 or Class 2 landscape screen.

§225-501.26. Recreational, Sports & Entertainment Facilities - Country Club. (C zoning district).

A. A minimum of two points of vehicular access shall service the facility.

B. No housing shall be constructed as part the facility.

C. All best management practices and environmental performance standards as recommended by the "Golf Course Water Resources Handbook Golf Course Water Resources Handbook of Best Management Practices of Best Management Practices" (2009 or as updated) shall be incorporated into site design and development

D. Outdoor storage of material and equipment is specifically permitted as a part of this facility, however these areas shall be screened from public roads and adjacent residential areas by a Class1 or Class 2 Landscape Screen.

E. A Traffic Impact Study shall be completed to identify and evaluate potential patronage's vehicular patterns and demands.

F. An Access Plan shall be submitted for Township review and evaluation to ensure minimized impacts of conflicts between the vehicular routes and alignments of the facility and surrounding uses.

G. At grade road crossings of golf carts is prohibited.

H. Outdoor activity areas shall meet the yard area requirements of the zoning district.

§225-501.27. Recreational, Sports & Entertainment Facilities - Golf Courses. (C zoning district).

A. A minimum of two points of vehicular access shall service the facility.

B. No housing shall be constructed as part the facility.

C. All best management practices and environmental performance standards as recommended by the "Golf Course Water Resources Handbook Golf Course Water Resources Handbook of Best Management Practices of Best Management Practices" (2009 or as updated) shall be incorporated into site design and development

D. Outdoor storage of material and equipment is specifically permitted as a part of this facility, however these areas shall be screened from public roads and adjacent residential areas by a Class1 or Class 2 Landscape Screen.

E. A Traffic Impact Study shall be completed to identify and evaluate potential patronage's vehicular patterns and demands.

F. An Access Plan shall be submitted for Township review and evaluation to ensure minimized impacts of conflicts between the vehicular routes and alignments of the facility and surrounding uses.

G. At grade road crossings of golf carts is prohibited.

H. Outdoor activity areas shall meet the yard area requirement of the zoning district.

§225-501.28. Recreational, Sports & Entertainment Facilities – Zoos. (C zoning district).

A. The minimum lot size for a zoo shall be 10 acres.

B. Pedestrian and vehicular points of ingress/egress shall be aligned with the surrounding land uses and points of connectivity in order to optimize the flow of peak seasonal patronage.

C. To minimize heat impacts on facility animals, landscaping within parking areas shall be increased 50% above Base Zoning District requirements for said use.

D. The applicant shall provide credible evidence that animal waste will be addressed in a manner so as not to create offensive odors in the surrounding area.

E. All animals shall be kept at least 50 feet away from property lines, including areas of animal excrement. Animals shall be kept in a fenced enclosure of adequate height to prevent the animal from escaping the property.

F. Zoos shall comply with all other Federal, State and local codes, ordinances and requirements.

§225-501.29. Retail, Large-scale. (PMU, HMU & PCW zoning districts).

A. Within the PMU zoning district, Large-scale Retail shall only be permitted within the Palmdale Chocolate Avenue and Palmdale Future Development Area Overlay zoning districts.

B. Within the HMU zoning district, Large-scale Retail shall only be permitted within the Downtown Core, Southern core and East Derry Road Overlay zoning districts.

CB. Parking shall not be located between the front building façade and the front lot line. On a corner lot, parking shall not be closer to the secondary frontage than the building face on that side.

DB. Where feasible, parking shall be shared with another use based upon findings from a completed parking study submitted as part of the proposed development.

I. EC. Any structure containing a street fronting façade wall of more than 100 horizontal feet shall provide horizontal and vertical breaks in the building to reduce the appearance of a long flat building face.

F. C. Large-scale retail within the PCW zoning district shall only be permitted as part of a Master Plan development area.

No front façade of a large retail center shall have a building face exceeding 100 horizontal feet at the same continuous plane.

§225-501.30. Taxidermy. (GC zoning district).

A. There shall be no outdoor storage of materials associated with said use.

B. No slaughtering or animal rendering shall be permitted on site.

C. A waste management plan shall be presented at the time of hearing and shall comply with any applicable State and Federal requirements, including all advisories issued by the Pennsylvania Game Commission for the prevention of spread of animal diseases.

§225-501.31A. Manufacturing. (LC zoning district)

A. The applicant shall provide an analysis of the physical conditions of the public road system serving the proposed use. The analysis shall include information on the current traffic flows on this road system and projections of traffic to be generated by the proposed use. Improvements to the road shall be provided by the applicant to compensate for any adverse effects which will result to the road system as a result of the use and shall cause the road system to be improved to such a condition in which no adverse effects will result from the traffic flow generated by the use.

B. Truck maneuvering areas shall be improved with an asphalt or concrete surface and such areas shall be located at least 25 feet from all property lines or public street right-of-way lines.

C. The applicant shall demonstrate that the establishment of the manufacturing use will result in no adverse effect on the sanitary sewer and storm drainage system.

§225-501.31B. Mineral Extraction Activities. (I zoning district).

A. The use may not substantially injure or detract from the lawful existing or permitted use of other properties.

B. The use may not adversely affect any water supply source.

C. The use may not adversely affect the logical, efficient and economical extensions of public services, facilities and utilities throughout the Township.

D. The use may not be detrimental to the health, safety or welfare of the Township residents.

E. The use may not result in the land area being placed in a condition which will prevent the use of that land for economically and ecologically productive uses upon completion of the mineral extraction operation.

F. The use must comply with all applicable Local, State and Federal regulations.

G. The use shall result in no off-site evidence (physical or noise) that blasting activities take place on site.

H. All areas of the use, other than screening and access drives, shall be set back from the property line a minimum of 250 feet, and be set back from any zoning district other than the Industrial District a minimum of 1,000 feet.

I. All areas of the use shall be completely screened from view at an eye level of four feet above ground level when viewed from all property lines.

J. Hazardous areas shall be enclosed by fences suitable to prevent unauthorized people from entering such areas.

K. Performance security shall be provided to the Township to guarantee that within six months after the termination of the mineral extraction activities, the area of actual disturbance must be rehabilitated to a condition of reasonable physical attractiveness and, as practical, restored. In rehabilitating the area of actual disturbance, the owner or operator must comply with the following standards:

1. The slope of earth material in any excavated pit must not exceed the angle of slippage.

2. Where filling is proposed, the fill must be covered with topsoil to a depth necessary to sustain grass, plants and trees.

3. Suitable vegetative ground cover shall be planted.

4. To prevent any silt, eroded debris or other loose material from filling any existing drainage course or encroaching on State or Township roads or private property, all surface drainage must be controlled by dikes, barriers or drainage structures. All measures to control natural drainage or flood water must be with the approval of the Township Board of Supervisors and Pennsylvania Department of Environmental Protection.

5. Within one year after termination of operations, all equipment, buildings and structures must be removed from the site.

L. The applicant shall submit an analysis of raw water needs (ground water or surface water) from either private or public sources, indicating the quantity of water required.

1. If the source is from a public utility, the applicant shall submit documentation that the public utility can and will supply the water needed.

2. If a private water source is proposed, a water feasibility study shall be submitted to enable the Township to evaluate the impact of the use on the ground water supply and on existing wells and other lands which would be affected. The water feasibility study shall include the following minimum information:

a. Calculations of the projected water needs.

b. A geologic map of the area with a radius of at least one mile from the site.

c. The location of all existing and proposed wells within 2,000 feet of the site, with a notation of the capacity of all high-yield wells.

d. Based on the geologic formation(s) underlying the site, the long-term safe yield shall be determined.

e. A determination of the effects of the proposed water supply system on the quantity and quality of water in existing wells, streams and the ground water table.

f. A statement of the qualifications and the signature(s) of the person(s) preparing the study.

M. The applicant shall provide an analysis of the physical conditions of the public road system serving the proposed use. The analysis shall include information on the current traffic flows on this road system, and projections of traffic to be generated by the proposed use. Improvements to the road shall be provided by the applicant to compensate for any adverse effects which will result to the road system as a result of the use and shall cause the road system to be improved to such a condition in which no adverse effects will result from the traffic flow generated by the use.

§225-501.32. Truck Terminals. (LC zoning district).

A. The use may not substantially injure or detract from the lawful existing or permitted use of the other properties.

B. The applicant shall provide an analysis of the physical conditions of the public road system serving the proposed use. The analysis shall include information on the current traffic flows on this road system and projections of traffic to be generated by the proposed use. Improvements to the road shall be provided by the applicant to compensate for any adverse effects which will result to the road system as a result of the use and shall cause the road system to be improved to such a condition in which no adverse effects will result from the traffic flow generated by the use.

C. Truck maneuvering areas shall be improved with an asphalt or concrete surface and such areas shall be located at least 25 feet from all property or public street right-of-way lines.

D. The applicant shall demonstrate that the establishment of the truck terminal will result in no adverse effect on the sanitary sewer and storm drainage system.

§225-501.33. Waste Management Facilities. (LC zoning district).

A. Any application for a conditional use submitted to the Township Board of Supervisors pursuant to this section shall include, if applicable, a copy of the applicant's permit application to the PaDEP or any successor agency having authority to review and approve such application, along with a copy, if applicable, of a certification from such agency that the application is administratively complete. Final approval of the conditional use by the Township Board of Supervisors shall be contingent upon the applicant submitting a copy of its approved permit to the Township.

B. All driveways in to the site shall be paved for a distance of at least 100 feet from the adjacent public street right-of-way line.

C. The waste management facility shall be landscaped and screened in accordance with the requirements set forth in regulations of the PaDEP or its successor agency.

D. Litter control shall be exercised to prevent the scattering of wind-borne debris and a working plan for the clean-up of litter shall be submitted to the Township for consideration prior to the Township granting a conditional use.

E. Measures should be taken to clean vehicles to prevent mud which may have been accumulated on the vehicle from being dropped off site when the vehicle leaves the site. Mud or dirt tracked onto public roads shall only be cleaned by broom or scraper. No material shall be washed from the road.

F. Require that the site, upon proper closure, be in a useful condition such that it can be offered for future dedication to the Township for park and/or recreational facilities or similar use approved by the Township Board of Supervisors. No cut or fill slopes shall remain at a slope in excess of three horizontal to one vertical.

G. User access to the site shall be limited to those posted times when an attendant is on duty.

H. All areas of the site shall be protected by locked barricades, fences, gates or other positive means designed to deny access to the area at unauthorized times or locations. Potentially dangerous and/or life threatening areas shall be enclosed by a fence suitable to prevent unauthorized people from entering such areas.

I. Hazardous waste as defined by the Pennsylvania Solid Waste Management Act, 35 P.S. § 6018.101 et seq., and the regulations promulgated thereunder, shall not be disposed of on the site.

J. The unloading, processing, transfer and deposition of waste shall be continuously supervised by an individual who has demonstrated expertise as a facility operator.

K. Any waste that cannot be used in any disposal process shall not be accepted. Material that is to be recycled shall be stored in leak- and vector-proof containers. Such containers shall be designed to prevent their being carried by wind or water. These containers shall be stored within a completely enclosed building.

L. A contingency plan for disposal of waste during facility shutdown shall be submitted to and approved by the Township prior to any grant of conditional use.

M. The applicant shall submit an analysis of raw water needs (ground water or surface water) from either private or public sources, indicating quantity of water required.

1. If the source is from a public utility, the applicant shall submit documentation that the public utility can and will supply the water needed.

2. If a private water source is proposed, a water feasibility study shall be submitted to enable the Township to evaluate the impact of the use on the ground water supply and on existing wells and on other lands which would be affected. The water feasibility study shall include the following minimum information:

   a. Calculations of the projected water needs.

   b. A geologic map, at a minimum scale of one inch equals 500 feet, of the area within a radius of at least one mile from the site which depicts existing or former known sinkhole activity.

   c. The location of all existing and proposed wells within 2,000 feet of the site, with a notation of the capacity of all high-yield wells.

   d. Based on the geologic formation(s) underlying the site, the long-term safe yield shall be determined.

   e. A determination of the effects of the proposed water supply system on the quantity and quality of water in nearby wells, streams and the ground water table.

   f. A statement of the qualification and the signature(s) of the person(s) preparing the study.

N. Leachate from the waste shall be disposed of in a manner in compliance with any applicable local, State and Federal regulations. If leachate is to be discharged to a municipal sewage facility, appropriate permits shall be obtained from the applicable agencies and authorities.

O. The applicant shall provide an analysis of the physical conditions of the public road system serving the proposed use. The analysis shall include information on the current traffic flows on this road system, and projections of traffic to be generated by the proposed use. Improvements to the road shall be provided by the applicant to compensate for adverse effects which will result to the public road system as a result of the use, and shall cause the road system to be improved to such a condition in which no adverse effects will result from the traffic flow generated by the use.

P. Conditions and safeguards shall be no more stringent than the then existing laws and regulations of the Commonwealth of Pennsylvania applicable to such facilities. The injection of sewage sludge into the ground shall not be considered to create a waste management facility.

§225-501.34. Life Care Facilities and Skilled Nursing Home. (PCN, PMU, HMU & PCW zoning districts).

A. Traffic generated by the use shall not exceed that which would be generated by the maximum generated by other permitted by-right uses.

B. Ingress and egress points must be located in safe and proper locations.

C. No more than two persons shall reside in any institutional dwelling unit.

D. The minimum lot area shall be three acres.

E. The number of institutional dwelling units may not exceed 17 per net developable acre of the site.

F. The use shall be served by a public sewage system.

G. The use shall be served by a public water supply system.

H. Parking shall comply with this Chapter, except that the Township Board of Supervisors may reduce the parking space requirements to no less than 1/2 space for each institutional dwelling unit and one space for each employee, on the largest shift, if the applicant can demonstrate to the Township Board of Supervisors' satisfaction that 1/2 space per institutional dwelling unit will meet the demands for off-street parking.

I. Class 1 or Class 2 Landscaped buffers shall be established along each side and rear yard area, in accordance with the design specifications of §225-402.

J. The applicant shall demonstrate that a need for such a facility exists within Derry Township the Township.

K. The Township Board of Supervisors may attach certain conditions to its approval in order to preserve and protect the character of the zoning district and the health, safety and welfare of the public.

L. The applicant shall demonstrate that all applicable Federal, State, County and Township licenses or certifications have been obtained.

M. All portions of a life care facility or skilled nursing facility shall be provided with an automatic fire suppression system.

N. The minimum gross floor area for institutional dwelling units shall be as follows:

1. Skilled nursing home dwelling unit: 150 square feet per person.

2. Life care facility: 550 square feet for a one bedroom unit, 750 square feet for a two bedroom unit.

O. The use shall not provide any services to nonresidents of the home, other than providing meals for employees or visitors to residents of the facility.

§225-501.35. Group Home for Persons with Disabilities or without Disabilities. (Both with or without disabilities in the C, MCC & LC zoning districts and with disabilities in the R-2 zoning district).

A. The applicant shall submit the following:

1. A statement describing the character of the facility.

2. The program's policies and goals and means proposed to accomplish the goals.

3. A description of the characteristics of the residents of the proposed group home, noting, in particular, their ages, number and any impairment which they may possess.

4. A study documenting the need for such a facility in Derry Township the Township.

B. Specific standards.

1. Any group home shall have a minimum of 350 square feet of habitable floor area provided for each occupant.

2. If located within the C or R-1 zoning districts, a group home shall be conducted in a single-family detached dwelling.

3. A common kitchen and dining facility shall be provided and no cooking or dining facilities shall be provided in individual rooms or suites.

4. All group homes shall be connected to public water and public sanitary sewage facilities.

5. A group home shall not be located within 2,000 feet of any other group home.

6. The applicant shall demonstrate that adequate off-street parking facilities shall be provided to meet the needs of the group home use.

7. The group home use, after having been authorized as a conditional use by the Township Board of Supervisors, shall not be changed to serve a greater number of residents or residents with impairments which differ substantially from those which were described in the initial application, unless the change in the characteristics of the residents is reconsidered approved by the Township Board of Supervisors pursuant to procedures for approving conditional uses, and such change is approved by the Board.

8. The Board may require any outdoor play or recreation (passive or active) to be enclosed by a six foot high fence, if it is deemed necessary to protect the general welfare of the surrounding community.

9. A grant of conditional use may be revoked by the Board if it is determined that the residents of the group home have endangered the general welfare of the surrounding community due to a breach of security or lack of adequate supervision.

§225-501.36. Research/Technology Business Incubator. (MCC, PCW & I zoning districts).

A. Space within an incubator shall be offered and available only by lease.

B. Occupancy by a tenant within the incubator shall not exceed three years.

C. The incubator shall be served by public water and public sewer.

D. If toxic or volatile materials are processed on the site, the applicant shall provide an emergency action plan for review by the Township Board of Supervisors. and and the applicant shall provide copies of the emergency action plan to first responders (fire, police, EMA) initially, and at any time the plan is updated.

E. The applicant shall provide any necessary pretreatment of waste or provide evidence that none is necessary prior to Derry Township Municipal Authority receiving the same.

F. Parking shall be provided in accordance with this Chapter, with the number of spaces determined in accordance with standards applicable to "office buildings."

§225-501.37. Recycling Center. (LC zoning district).

A. There shall be no outdoor storage of materials used or generated by the recycling activity.

B. The potential for noise, fumes and dust shall be evaluated by the Township Board of Supervisors and a finding shall be made that no surrounding properties will be adversely affected by noise, fumes or dust which may be associated with the use.

C. The site shall be provided with sufficient loading and unloading areas so that traffic will not back up onto adjacent or nearby streets.

D. User access to the site shall be limited to those times when an attendant is on duty and such times shall be posted on the site.

E. All areas of the site shall be protected by locked barricades, fences, gates or other positive means designed to deny public access to the site at unauthorized times or locations.

F. Litter control shall be exercised to prevent the scattering of wind-borne debris, and a working plan for the clean-up of litter shall be submitted to the Township for consideration prior to the Township granting the conditional use.

G. A Class 1 or Class 2 landscaped buffer shall be provided around the perimeter of the use in accordance with the design specifications of §225-**403~~2.1~~**.

§225-501.38. Sewage Treatment Plants. (I zoning district).

A. All areas at the use other than alleys, drives and screening shall be set back a minimum of 250 feet from any property line.

B. Hazardous areas shall be enclosed by a fence suitable to prevent unauthorized people from gaining access to such areas.

C. The actual area of sewage treatment shall not be established in a floodway, floodway fringe or approximated floodplain.

D. The potential for noise, fumes and dust shall be evaluated by the Township Board of Supervisors and a finding shall be made that no surrounding properties will be adversely affected by noise or fumes associated with the use.

E. A Class 1 or Class 2 landscaped buffer shall be provided around the perimeter of the use in accordance with the design specifications of §225-**403~~2~~**.

§225-501.39. Sexually Oriented Business. (CR and LC zoning districts).

A. Permit Required.

1. No person may operate or be employed at a sexually oriented business without first obtaining all permits and licensing as required by the Township[CWE16][SS17].

B. Location of Sexually Oriented Businesses.

1. A person is guilty of a violation of this Chapter if he operates or causes to be operated a sexually oriented business outside of the district in which a sexually oriented business is a permitted use. No sexually oriented businesses shall be located outside a district in which a sexually oriented business is a permitted use.

2. A person is guilty of a violation of this Chapter if he operates or causes to be operated a sexually oriented business within one thousand (1,000) feet of:

a. A place of worship.
b. A public or private pre-elementary, elementary or secondary school.
c. A public library.
d. A child care facility or nursery school.
e. A park adjacent to any residential district.

3. A person is guilty of a violation of this Chapter if he causes or permits the operation, establishment, substantial enlargement or transfer of ownership or control of a sexually oriented business within five thousand (5,000) feet of another sexually oriented business.

4. A person is guilty of a violation of this Chapter if he causes or permits the operation, establishment or maintenance of more than one (1) sexually oriented business in the same building, structure or portion thereof; or the increase of floor area of any sexually oriented business in any building, structure or portion thereof containing another sexually oriented business.

5. For the purpose of this Section, measurement shall be made in a straight line, without regard to intervening structures or objects, from the nearest portion of the building or structure used as a part of the premises where a sexually oriented business is conducted to the nearest lot line of the premises of a church, public or private pre-elementary, elementary or secondary school, public library, child care facility or nursery school; or to the nearest boundary of an affected public park.

6. The distance between any two sexually oriented businesses shall be measured in a straight line, without regard to intervening structures or objects, from the closest exterior wall of the structure in which each business is located.

7. Any sexually oriented business lawfully operating on the date of enactment of this Section that is in violation of this Section shall be deemed a nonconforming use. Such nonconforming use shall not be increased, enlarged, extended or altered, except that the use may be changed to a conforming use. In the event that two (2) or more sexually oriented businesses are within five thousand (5,000) feet of one another and otherwise in a permissible location, the sexually oriented business which was first established and continually operating at a particular location is the conforming use and the later established business is nonconforming.

8. A sexually oriented business lawfully operating as a conforming use is not rendered a nonconforming used by the location, subsequent to the grant or renewal of the sexually oriented business permit, of a church, public or private pre-elementary, elementary or secondary school, public library, child care facility, nursery school or public park within one thousand (1,000) feet of the sexually oriented business. This provision applies only to the renewal of a valid permit, and does not apply when an application for a permit is submitted after a permit has expired or has been revoked.

9. No sexually oriented business shall be located within two hundred (200) feet of a front setback line of a dwelling lot located in a residentially zoned district. Measurement shall be made in a straight line, without regard to intervening structures or objects, from the nearest portion of the building or structure used as a part of the premises where a sexually oriented business is conducted to said front setback line.

§225-501.40. Uses Similar to Specified Permitted Uses. (All zoning districts).

A. The proposed use shall be similar to and of the same general character as a by-right permitted use in the zoning district in which the use is proposed.

B. The use may not substantially injure or detract from the lawful existing or permitted use of other properties.

C. The proposed use shall not generate noise or traffic in excess of other by-right uses permitted in the district.

D. The proposed use shall not generate sewer or water usages in excess of other by-right uses permitted in the district.

E. Means of ingress and egress to the lot shall be from an arterial or collector street only.

F.E. The net density shall not exceed that which is permissible for the Zoning District in which it is proposed.

G.F. Parking and site circulation shall be designed to be residential in scale and appearance.

H.G. 1 shade tree per 8 required parking spaces shall be designed and constructed as part of the development.

§225-501.41. Billboard Signs. (LC & I zoning district).

A. The billboard shall not be placed closer than 300 feet to a building used as one or more dwellings.

B. The billboard shall not be placed within a 1,000-foot radius of another billboard.

C. The billboard shall not be placed in the minimum front or side yard area as specified in this Chapter for the particular zoning district in which the sign is to be located.

D. The billboard sign area shall have a maximum vertical dimension of 12 feet and a maximum horizontal dimension of 25 feet.

E. The maximum area of a billboard shall be 300 square feet.

F. The maximum sign height of a billboard shall not exceed 20 feet.

G. Decorative shrubbery shall be provided at the sign location if, in the opinion of the Township Board of Supervisors, such planting would result in the sign having an appearance more compatible with the area in which the sign would be located.

H. The billboard shall not adversely affect the health and safety of persons in the area of the billboard.

I. The billboard shall not be detrimental to the use or development of, or change the essential character of, the area in which the sign is located.

J. The billboard may portray information which directs attention to a business or commodity, service or entertainment which may or may not be located on the premises on which the sign Billboard is located.

§225-501.42. Shared Parking.

A. Upon the granting of shared parking as a conditional use, the provisions of §225-401402 requiring off-street parking spaces (including parking spaces for persons with disabilities) shall not apply to the sharing land uses, but the sharing land uses shall be governed solely by the conditional use and are modified by the conditional use of this section. The granting of shared parking as a conditional use shall not affect requirements for off-street loading and unloading space or for emergency access. Grade separated crossings shall not be a condition of shared parking. The following shall be the conditions to the granting of shared parking as a conditional use in the Downtown Core Overlay or in a Master Plan Development Area:

1. The owners of two or more lots shall have entered into a shared parking agreement.

2. The parties to the shared parking agreement shall be co-applicants for the conditional use.

3. The co-applicants shall submit the following in support of the application:

   a. A copy of the shared parking agreement;

   b. A site plan showing the locations of shared parking spaces and the locations of the sharing land uses;

   c. A shared parking demand matrix showing the calculated demand for parking spaces by the sharing land uses; and

   d. A shared parking demand matrix showing the calculated demand for parking spaces for persons with disabilities by the sharing land uses.

4. The shared parking agreement shall have a minimum term of 25 years and shall provide for the following: a) adequate operation, maintenance, control, and security of the shared parking spaces; b) adequate insurance of liability for personal injury and property damage occurring on the shared parking spaces; c) directional signs, visible to motorists and pedestrians, directing them via a safe route of travel to the shared parking spaces; and d) directional signs, visible to motorists and pedestrians, directing them via a safe route of travel to the sharing land uses. All amendments to the shared parking agreement shall be filed with the Zoning Officer.

5. The site plan shall contain the following information: a) the location of each shared parking space and the number of shared parking spaces; b) the location of each shared parking space for persons with disabilities and the number of shared parking spaces for persons with disabilities; c) the location of each sharing land use; d) evidence that each shared parking space and each sharing land use is in the Downtown Core Overlay or is part of a Master Plan Development Area; and e) evidence that no shared parking space for persons with disabilities is located farther from the sharing land uses which it serves than the maximum distance permitted by applicable laws and ordinances. All amendments to the site plan shall be filed with the Zoning Officer.

6. The shared parking demand matrices shall calculate the demand for parking by the sharing land uses according to the Shared Parking Demand Chart (See Appendix B.1 & B.2)appended to this article. The shared parking demand matrices shall be prepared as follows:

   a. a) lList all sharing land uses, including any proposed land use for which the conditional use is sought; b)

   b. group the sharing land uses according to the categories in the shared parking demand chart; c)

   c. calculate the aggregate number of parking spaces required for each category of sharing land use according to the requirements of §225-401402; d)

   d. multiply the required number of spaces by the percentage shown in the shared parking demand chart ("80" means 80% or 0.80 of the required number of spaces) for each hour for each category; e)

   e. tally the total number of spaces needed by hour of day; f)

   f. find the largest number of spaces needed at any time on any day; and, g)

6.g. round up to the nearest whole space. The resulting number of spaces is the calculated parking demand by all sharing land uses for purposes of this section. Following each change in the size or character of the sharing land uses, new shared parking demand matrices shall be filed with the Zoning Officer.

B. Change of shared parking spaces and sharing land uses. A change in the number or location of shared parking spaces, or in the size or character of the sharing land uses, shall not affect the conditional use so long as:

1. 1) tThere is no change in the lots subject to the shared parking agreement, and, 2)

B.2. it can be demonstrated to the Zoning Officer, as provided in this section, that, following the change, the shared parking spaces are adequate to satisfy the demand for parking by the sharing land uses. A change in the size or character of a sharing land use that renders the number of shared parking spaces inadequate to satisfy the demand for parking by all sharing land uses shall terminate the conditional use as to the changed land use only but shall not affect any other sharing land use.

C. Amendment of this section. No amendment of this section (including, without limitation, any change in the shared parking demand chart) shall affect any conditional use granted prior to the amendment. Notwithstanding any such amendment, a conditional use granted under this section shall continue to be governed in all respects by the provisions of this section (including the shared parking demand chart) in effect when the conditional use was granted.

D. Expiration of the conditional use. A conditional use shall expire upon the expiration or earlier termination of the shared parking agreement on which it was conditioned. After expiration of the conditional use, each separate use on the subject lots shall satisfy the requirements of §225-401402, and no failure to meet such requirements shall be considered, solely because of the existence of shared parking during the term of the shared parking agreement, to be a nonconformity which legally existed prior to the adoption of this section.

§225-501.43. Cluster Development Option.[BW18]

A. Residential cluster developments may be permitted as a conditional use in the Conservation, R-1, R-2 and R-3 Zoning Districts when approved by the Township Board of Supervisors. The Township Board of Supervisors shall approve a cluster option pursuant to the standards of this section and other applicable sections of this Chapter and other applicable regulations, and upon finding that the utilization of the cluster option will result in all of the following occurring to a significant degree above that which would occur if the development would not be clustered:

1. Preservation of open space.

2. Lack of disturbance of sensitive environmental areas, if applicable.

3. Lower housing costs.

4. Lower road maintenance costs.

5. Efficiency of traffic pattern.

6. Efficiency of utility systems.

B. General provisions.

1. Minimum lot width, minimum lot area, minimum lot depth, minimum front yard, minimum side yard, minimum rear yard, minimum vegetative lot coverage, and maximum impervious cover may be modified from the specifications set forth in the zoning district regulations applicable to the development site to the following minimum cluster standards:

Table 412: Cluster Standards

	Min. Lot Width (feet)	Min. Lot Depth (feet)	Min. Side Yard[5] (feet)	Min. Rear Yard[5] (feet)	Min. Veg. Cover (percent)	Min. Front Yard (feet)	Max. Imperv. Cover (percent)
Conserv.	48	60	10[2]	10	75[1]	25	15[1]
R-1	48	60	10[2]	10	60[1]	25	30[1]
R-2	48	60	10[2]	10	60[1]	25	30[1]
R-3		60	10[4]	10	40[1]		50[1]
Semidetached	16					20	
Attached	16					20	
Single-fam. det.[3]	34					20	
Two-fam. attached	16						
Multifam. apt.	60		10; 20 if 8 or more d.u. apt.				

NOTES:

[1]Percent of gross site area.

[2]Dwellings may be placed on side line if remaining side yard is twice minimum specified and 10 foot maintenance easement is provided on adjacent land to access building on property line.

[3] Semi-detached and attached dwelling units may be established in a cluster development in the when the gross area of the development site has a minimum of 20 acres of area. The total amount of semi-detached and attached dwelling units together shall consist of no more than 40% of the total number of dwelling units in the cluster development.

[4] May be reduced to five feet if a sprinkler fire suppression system is installed in all habitable and garage areas of the single-family detached dwelling unit having the reduced side yard.

[5] Minimum side and rear yards areas also apply to accessory structures.

Table 412: Cluster Standards

Min. Lot Width	Min. Lot Depth	Min. Side Yard[5]	Min. Rear Yard[5]	Min. Veg. Cover	Min. Front Yard	Max. Imperv. Cover
(feet)	(feet)	(feet)	(feet)	(percent)	(feet)	(percent)

2. Except as modified in this Section, Rresidential types and accessory uses shall be permitted in a cluster development only as permitted in the zoning district applicable to the proposed site.

3. The maximum residential density shall not exceedmay be increased by 25% over the maximum residential density specified in this Chapter for the zoning district in which the cluster is proposed.

4. All lands not conveyed with the dwelling units and not dedicated as public streets shall be owned in common by the owner or owners of the dwelling.

5. Minimum vegetative cover and maximum impervious cover specified in this Chapter for the zoning district in which the cluster is proposed Table 225-shall apply to the gross site area, rather than individual lots.

6. The minimum distance between any building used as a dwelling unit or units including porches, decks, patios and other attached appurtenances shall be twice as wide as the minimum required side yard.

B. Common driveways.

1. Common driveways constructed to a minimum width of 24 feet shall be provided, with paving standards meeting the requirements for a Minor Street as required by Chapter 185, Subdivision and Land Development. Lots having frontage on a common driveway shall have their required lot width calculated at the right-of-way line of the common drive in the same method as if the common drive were a public street.

2. Common driveways shall be owned in common by all property owners of the development and shall be part of the common open space; however, a 42-foot minimum right-of-way shall be established for each common driveway. Common driveways shall be centered on the street right-of-way.

3. Common driveways shall connect only to a public street.

C. Minimum number of dwelling units. A cluster development shall consist of a minimum of six dwelling units.

D. Common open space.

1. The developer shall establish a nonprofit organization under the laws of the Commonwealth of Pennsylvania for the common ownership, care and maintenance of such lands.

a. Such organization shall be created by covenants and agreements running with the land and shall apply to all persons having ownership within the development, other than the owners of public streets and utility facilities.

b. The organization documents shall describe the common open space as to location, size, and use and shall set forth the organizational structure as well as the method of assessment for the care and maintenance of such lands.

c. Such organization documents shall also contain provisions enabling the Township to assess the persons having ownership in the development, other than owners of utility facilities, the cost necessary for the maintenance and care of the common open space should it not be properly maintained by such organization.

d. Such organization shall not be dissolved, nor shall any organization dispose of any common open space by sale or otherwise, except that such lands or portions thereof may, at any time, with Township approval, be conveyed to the Township or a public utility to be used for public purposes.

2. No common open space lands may be used or improved for purposes other than those shown on the development plan approved by the Township or subsequent revisions thereto.

3. To the largest extent practical, natural vegetation shall be preserved on common open space, wooded and wetland areas and shall have vegetation removed only for safety or reasons of prudent forest management, unless such disturbance is depicted on the development plan approved by the Township.

4. The minimum amount of common open space in a cluster development shall be as follows:

a. Conservation District: 45% of total site area.

b. R-1 and R-2 District: 35% of total site area.

c. R-3 District: 25% of total site area.

E. Submission and application.

1. The application for a cluster option development as a conditional use shall include the same data required to be submitted with a sketch subdivision/land development plan as specified in Chapter **185**, Subdivision and Land Development, plus calculations depicting the percent of common open space, percent of vegetative cover, percent of impervious area and the exact dimensions of proposed lots and floor plans and elevations of proposed dwelling units.

2. The burden of demonstrating the positive aspect of the project when compared to a by-right development of the land as referenced in §225-401402.4 shall rest with the applicant.

§225-501.44 Unique Buildings. (All zoning districts).

A. That the building is without reasonable economic value if used for those uses permitted by right or by special exception, due to the unique nature of the building, the purpose for which it was originally designed and the costs of renovation.

B. That the proposed use of the building is a residential use which would be permitted by right in any Zoning Districts, or is to be used as nonretail business or professional office.

C. That the building has in excess of 5,000 square feet of usable floor area.

D. That the building has been used as a principal building, rather than as an accessory building or use; provided, however, if an accessory building has historical or architectural significance worthy of preservation by alternate use, the Township Board of Supervisors may waive this requirement.

E. That the proposed building use will comply with all height, coverage, area and yard requirements of the zoning district in which it is located, unless currently nonconforming, and with all requirements for parking, signage and other regulations which would be applicable for the zoning district where such use would be permitted by right.

F. The applicant shall submit a sketch plan showing the location of the building, access to public roads, proposed and existing parking and other pertinent information which may be requested by the Township, together with a detailed description of the proposed use, to include proposed interior and exterior changes.

G. The proposed use, if approved, may not be later expanded beyond that area designated in the original application for a conditional use.

H. All other zoning, subdivision and State and local code requirements must be met, to the extent applicable, unless waivers or variances are obtained from the appropriate agency.

I. The applicant and property owner must accept such reasonable conditions and safeguards as the Township Board of Supervisors deems necessary to preserve the spirit and intent of this Chapter which may include, but is not limited to, larger than normal buffer yards, screening, landscaping, restrictions or exterior changes or other acts which will reduce the impact of the proposed use on the surrounding property, and to maintain the character of the zoning district.

§225-501.45. Affordable Housing Density Incentive Option.

A. The affordable housing density incentive option may be permitted as a conditional use in the R-2, Hershey and Palmdale mixed use zoning districts when approved by the Township Board of Supervisors pursuant to the standards set forth in this section and other applicable sections of this Chapter and other applicable regulations. The Township Board of Supervisors may attach such conditions as are deemed necessary to implement the purposes of the Pennsylvania Municipalities Planning Code, 53 P.S. § 10101 et seq., this Chapter and the Derry Township Comprehensive Plan.

B. Specific standards.

1. Maximum residential density requirements of Article **II** may be modified to permit the establishment of single-family detached dwellings at a maximum residential density of 3.75 dwelling units per net developable acre in the R-2 zoning district, and 8.75 dwelling units per net developable acre in the HMU and PMU zoning districts.

1. 4.25 dwelling units [BW19]per net developable acre. An additional conditional use may be requested to cluster subject dwelling units, as specified in §225-**501.43**.

2. Affordable housing lots may be constructed to the lot criteria standards defined by Section 225-501.43.B.1 for cluster developments (Table 41). Lots located in the R-2 zoning district shall use the criteria applicable to cluster developments in the R-2 zoning district, and lots located in the HMU and PMU zoning districts shall use the criteria applicable for cluster single-family detached dwellings in the R-3 zoning district. Lot

minimum width and minimum depth shall be 90 feet and 115 feet, respectively, unless clustered, in which criteria applicable to clusters in the R-2 District should be used.

3. All lots shall be served by public sewer and public water facilities.

4. The minimum site area shall be 20 acres.

5. The maximum gross floor area of a single-family dwelling shall be 1,500 square feet, exclusive of basements, storage areas outside the heated walls of the dwelling and garage areas.

6. Any single-family detached dwelling not having a garage shall have an enclosed storage area attached to the dwelling, but located outside the heated walls of the dwelling, having a minimum floor area of 60 square feet and a minimum clear floor to ceiling height of six feet.

7. The only detached accessory buildings which shall be permitted are garages.

8. The requirements of Subsection **B(6)** and **(7)**, above, shall be established as deed restrictions and shall be reflected on the development plans as a condition of approval of the development plan.

9. The type of construction and architecture employed shall generally result in a dwelling which can be offered for sale at an affordable price. The use of materials or architectural design which would defeat the purpose of providing an incentive to produce affordable housing shall not be permitted.

10. The applicant for the conditional use shall present architectural drawings and specifications for all types of dwelling units which are to be constructed in the development. Dwelling units shall be constructed in conformance with the plans and specifications which were reviewed and approved by the Township Board of Supervisors pursuant to the grant of the conditional use.

11. An architectural control board shall be established by the developer which would ultimately consist of property owners of the development, to insure the architectural integrity and compatibility of dwelling units in the development.

12. Existing dwelling units which may exist on the site shall be subdivided from the site and shall be provided with a lot which conforms to the normal criteria for such use in the R-2, Hershey & Palmdale Mixed Use Zoning District, unless the existing dwelling conforms to the limitations set forth in this section.

§225-501.46. Administrative Offices of County, State or Federal Government (Office). (C, R-1, R-2, R-3, PCN, PCS, & LC zoning districts).

A. In addition to the minimum off-street parking requirements for the office use, applicants shall demonstrate that sufficient parking and/or storage area for all government vehicles and/or equipment has been provided without creating a shortage on the required parking for the property.

B. The use shall be limited to the business and professional office use only. Any accessory uses, such as educational training centers, fuel services, and lodging or dining services shall only be provided if such uses are permitted in the zoning district in which the office use is proposed.

§225-501.47. Mixed Use Building. (PCN zoning district).

A. Residential units shall not exceed 5067% of the total floor area of a mixed-use building.

B. Maximum density of residential units shall not exceed eight (8) dwelling units an acre.

§225-501.48. Visitor Center. (PCN zoning district).

A. Retail sales shall be limited to 50% of the total floor area of the use.

B. Retail sales shall be limited to food and beverages, confectionaries, clothing, books, stationery, newspapers and magazines, souvenirs, jewelry, video and audio recordings, medications and similar items.

§225-501.49. Funeral Home.

A. Applicant shall demonstrate that sufficient stacking area is provided for the queuing of a funeral procession to occur entirely outside of any adjacent public street right-of-way.

B. Sales and display areas items related to the funeral home use, such as headstone markers and coffins, shall be interior to the building.

§225-501.50. Hotels/Motels and Residence Hotels/Motels. (PCN & PCW zoning district).

A. All hotel and motel uses, including a residence hotel or motel, shall not be located any closer than 1,500 feet from any other hotel or motel use, including another residence hotel or motel use that is located within the PCW zoning district.

A.B. All hotel and motel uses, including a residence hotel or motel, shall only be permitted as part of a Master Planned development.

§225-501.51. Retail, Small-scale. (CR zoning district).

A. Retail sales shall be permitted as a principal use of a property in the CR zoning district shall beand shall be limited to such items as food, beverages, medications, confectionaries, hardware, pet supplies, clothing, household items and appliances, flowers, dry goods, furniture, books, stationery, newspapers and magazines, jewelry, electronic equipment, souvenirs and similar items.

§225-501.52. Group Child Care Facility. (PMU, HMU & PCW zoning districts).

A. Facility operators shall be responsible for meeting all State and Federal licensing and registrations requirements and shall provide proof of compliance with the Commonwealth of Pennsylvania Code, Title 55, Chapter 3270, Child Day Care Centers et seq.

B. Indoor and outdoor play areas shall be provided for Group Child Care Facilities in accordance with State requirements; in addition, the following requirements shall also apply:

1. Required parking areas shall not be utilized as play areas.

2. All outdoor play areas shall be located a minimum of 20 feet from rear and side property lines and shall not be located between the front face of the building and a public right-of-way.

3. All outdoor play areas shall be enclosed with a minimum four (4) foot high fence meeting the requirements of §225-407.

§225-501.53. Other Scientific Research, Development and Training Facilities. (I zoning district).

A. The applicant shall provide any necessary pretreatment of waste or provide evidence that none is necessary prior to Derry Township Municipal Authority receiving the same.

B. If toxic or volatile materials are processed on the site, the applicant shall provide an emergency action plan for review by the Township Board of Supervisors and shall provide copies to first responders (fire, police, EMA) initially and any time the plan is updated.

C. The potential for noise, fumes and dust shall be evaluated by the Township Board of Supervisors and a finding shall be made that no surrounding properties will be adversely affected by noise or fumes associated with the use.

D. The applicant shall demonstrate that the establishment of the manufacturing use will result in no adverse effect on the sanitary sewer and storm drainage system.

§225-501.54. Incinerators and Crematoriums. (MCC, LC & I zoning districts).

A. No incinerator or crematorium shall be located within 1,000 feet of a residential dwelling.

B. The potential for noise, fumes and dust shall be evaluated by the Township Board of Supervisors and a finding shall be made that no surrounding properties will be adversely affected by noise or fumes associated with the use. .

C. The applicant shall demonstrate continued compliance with all applicable State and Federal standards and regulations.

C.D. Incinerators and crematoriums located in the MCC zoning district shall be limited to the disposal of on-site generated medical wastes only.

§225-501.55. Highwall Signs.

A. Within the Planned Campus West Future Development Overlay, Planned Campus North, General Commercial, Derry Road Overlay, Downtown Core Overlay and Southern Core Overlay Zoning DistrictsWithin the 322/422 Zoning Overlay, the Planned Campus West Future Development Zoning Overlay, Planned Campus North, General Commercial, and Hershey Mixed Use[BJW20] Districts, one highwall sign may be erected per building on the lot, which does not have a landmark sign, in addition to the number and total area of permissible signs permitted on the lot as otherwise prescribed by this Ordinance.

B. Highwall signs are permitted on buildings four stories and higher.

C. Highwall signs shall not exceed 6' in height, cannot be affixed to a roof, shall not exceed the height of the upper building face or extend above the roof eave.

D. If the building is on a corner lot, only one highwall sign may be constructed. A highwall sign may straddle a building corner.

E. A Highwall sign may not be used to advertise a retail, food-service, residential, or industrial use, however it can be used to identify a hotel or motel, or a commercial center or commercial site, or the name of a building (i.e. The Trolley BarnPress Building or The Silos).,

F. In addition to traditional lighting sources, neon and/or LED technology may be utilized as part of a landmark sign, however changes in lighting colors may not exceed 6 changes per hour.

E.G. The Board of Supervisors shall deem that the material and design of the highwall sign is complementary to the architectural style of the building or center.

§225-501.56. Landmark Signs.

A. One landmark sign may be constructed on buildings in the Downtown Core Sign overlay in excess 30,000 gross square feet, or taller than 40' which do not have a highwall sign.

B. A landmark sign shall not exceed 50% of the building face immediately adjacent to the sign or upon which the sign is affixed., which is The resulting area of the landmark sign is in addition to the total number and sign area provided forpermitted in the Downtown Core Sign Overlay Table.

C. A landmark sign must be of dimensional or of 3-D construction.

D. The detailed design of the landmark sign shall be presented as part of the application for conditional use.

E. When mounted on a building, aA landmark sign may project above the height of the upper building face and/or , extend above the roof eave, or be roof mounted, provided the sign does not exceed the building height by more than 12 feet or 20% of actual height; whichever is greater. no more than ½ the total sign height or six feet whichever is less, but it cannot be roof mounted.

F. A landmark sign may straddle a building corner.

G. An electronic message board not exceeding 20 square feet in area may be presented for approval as a part of a landmark sign subject to the following requirements:

1. No motion or animation is permitted as an element of the landmark sign electronic message board.

2. Changing messages may not exceed six changes per hour.

3. The electronic message board shall not exceed a luminance of 5,000 nits (candela per square meter) during daylight hours between sunrise and sunset, and shall not exceed a luminance of 250 nits at all other times, nor shall the electronic message board produce an illuminance exceeding 0.3 footcandles above ambient light conditions at night. The applicant/installer shall demonstrate compliance with this section to the Zoning Officer. The measurement standards to determine electronic message board illuminance are cited in Appendix C.

4. The electronic message board shall include automatic dimming capabilities to ensure that the brightness required by this Section is maintained.

5. The applicant/owner of an electronic message board shall be required to coordinate with local authorities to display, when appropriate, emergency information important to the traveling public, including Amber Alerts, Silver Alerts, and weather or other emergency information.

6. In the case of malfunction, the electronic message board is required to contain a default design to freeze the sign message in one position.

H. In addition to traditional lighting sources, neon and/or LED technology may be utilized as part of a landmark sign, however changes in lighting colors may not exceed 6 changes per hour.

I. Except for LED and neon lighting, the source emitting the light cannot be visible from the ground.

A.

B. **An electronic message board not exceeding 20 square feet in area may be presented for approval as a part of a landmark sign subject to the following requirements:**

1. **No motion or animation is permitted as an element of the landmark sign electronic message board.**

2. **Changing messages or lighting may not exceed six changes per hour.**

3. **The sign shall not exceed a luminance of __ nits during daylight hours between sunrise and sunset, shall not exceed a luminance of ___ nits at all other times.**

C. **In addition to traditional lighting sources, neon and/or LED technology may be utilized as part of a landmark sign, however changes in lighting colors may not exceed 6 changes per hour.**

D. **Except for LED and neon lighting, the source emitting the light cannot be visible from the ground.**

§225-501.57. Theater/Auditorium. (PCW zoning district).

A. Any structure containing a street fronting façade wall of more than 100 horizontal feet shall provide horizontal and vertical breaks in the building to reduce the appearance of a long flat building face.

B. Theaters and auditoriums shall only be permitted as part of a Master Plan development area.

§225-501.58. DevelopmentMaster Plan Approval Process for Overlay Development Approval Area.[BW21]

A. The[CWE22] purpose of the Master Plan Development Aapproval process is to encourage owners to unitize or assemble large parcels of land to create a coordinated and well-conceived development which otherwise may not be created on small parcels of land. The Master Plan is an optional mechanism that permits owners and the Township to promote and encourage ingenuity in the layout and design of coordinated projects to more effectively improve and enhance sensitive natural resources, open spaces, and existing infrastructure, etc.connectivity and Smart Growth principles, by allowing flexibility in the site layout from requirements in the underlying zoning district. This process is permitted by conditional use in the following Development Approval Area Overlays:

1. This process is permitted by conditional use in the following Development Approval Area Overlays, which are also shown on Map #4:

a. West - Master Plan

Specific application requirements respond to the unique natural and geographic conditions, in the area as well as the scale and style of the development in the area. Consistent with the PA Municipalities Planning Code Traditional Neighborhood Development provisions, the West - Master Plan Development approval area process includes submission of a Master Plan that addresses all applicable requirements of this Chapter. Applicants are encouraged to enhance vehicular and pedestrian connectivity, reduce traffic congestion, and provide community services that are complementary to the surrounding neighborhoods and support the adjacent medical campus uses.

b. North - Master Plan

Specific application requirements respond to the planned entertainment campus area and unique natural and geographic conditions, in the area as well as the scale of the development in the area area. Consistent with the PA Municipalities Planning Code Traditional Neighborhood Development provisions, the North – Master Plan Development approval area process includes submission of a Master Development Plan that addresses all applicable requirements of this Chapter. Applicants are encouraged to provide activities that promote tourism and maintain acceptable event management.

c. South - Master Plan

Specific application requirements respond to the planned school campus area, fiduciary responsibilities of the property owner, unique natural and geographic conditions in the area, existing development patterns, as well as the scale and style of the development in the area. Consistent with the PA Municipalities Planning Code Traditional Neighborhood Development provisions, the South - Master Plan Development approval area process includes submission of a Master Development Plan that addresses all applicable requirements of this Chapter. Applicants are encouraged to promote and and enhance the bucolic character and groomed streetscapes of the area.

d. Central - Master Plan

Consistent with the PA Municipalities Planning Code Traditional Neighborhood Development provisions, the Central – Master Plan Development approval area process includes submission of a Master Development Plan that addresses all applicable requirements of this Chapter. Applicants are encouraged to provide for design standards that maintain historical development patterns of existing neighborhoods and enourage a mix of land uses that are complementary to the surrounding neighborhoods, and that promote revitalization and tourism to the Downtown, and maintain acceptable event management. As presented through building elevations illustrating the entire block in which an application is proposed, the applicant shall ensure compatibility of building form and character exists between existing and proposed improvements.

Specific application requirements respond to xxxxxxxx[CWE23].

2. Property Requirements for Master Plan Approval Process.

a. Site Requirements. Property subjected to Master Plan approval shall, at the time of first approval, meet the following site requirements:

i. Ownership. The entire site for the Master Plan shall:
   a. Be owned or controlled (i.e. contract purchaser, ground lease, etc.) by the developer, or
   b. The owners of all the land shall submit a document in recordable form and in a form approved by the Township Solicitor binding all owners to comply with the Master Plan approved by the Conditional Use approval.

ii. Minimum site area. The site subject to the Master Plan shall not be lessgreater than 21 acres in the Hershey Mixed Use and Palmdale Mixed Use zoning districts and shall be not less thanat least 10 acres in all other zoning districts.

iii. Frontage. The minimum frontage abutting on a public right-of-way shall not be less than one hundred fifty (150) feet.

iv. Access. The lot must provide for direct points of ingress and egress in a manner to assure convenient and safe access, which will not cause undue congestion or hazards on local roads.

v. Each lot shall, to the greatest extent possible, preserve sensitive environmental features, existing wooded areas and historical resources.

3. Approval of a Master Plan.

The Board of Supervisors shall approve or disapproveeny the Master Plan in accordance with the provisions of this Section as a conditional use. Prior to granting approval or denying a conditional use application, the proposal shall first be reviewed byforwarded to the Derry Township Planning Commission andand may be reviewed by the Dauphin County Planning Commission for review and comment. Furthermore, a minimum of one public hearing shall be held by the Board of Supervisors pursuant to public notice within 60 days of the applicant's request for a hearing. This time period may be extended if both parties agree to the time extension in writing.

4. Master Plan Application and Requirements.

a. Applicants seeking Master Plan approval are encouragedrequired to contact the Department of Community Development to discuss their project prior to formalany submission. During this time, the applicant shall submit a sketch plan meeting the requirements of Chapter 185, Subdivision and Land Development prior to formal submission of a Master Plan under this Section. It is also advisable to present a draftthe Sketch Plan of the master plan to staff,to the Township Planning Commission and the Board of Supervisors for informal discussions.

b. The applicant shall submit a sketch plan meeting the requirements of Chapter 185, Subdivision and Land Development prior to formal submission of a Master Plan under this Section.

cb. The submission for Master Plan approval shall include an application, a location map, site plans, proposed development plan and any required engineering reports that are deemed necessary by the Township to determine compliance with applicable Sections of the Township Code. The application shall be submitted to the Township, andThe application shall also be accompanied by a fee as may be set forth from time to time by resolution of the Board of Supervisors.

ccd. Such plans and other materials shall not be required to meet the standards prescribed for preliminary or final land development approval or for the issuance of a building permit so long as they provide reasonable detail of the proposed use or development and a sufficient basis for a determination as to its compliance with these regulations. The maps plans and other documents shall be provided in the same number as comparable documents required for preliminary subdivision and/or land development under plan processing Chapter 185, Subdivision and Land Development.

ddde. Incomplete application. The Director of Community Development shall review the application within 7 days of submission for completeness in accordance with the requirements of this Chapter. If an application is found to be incomplete, the application shall be rejected; the Director of Community Development shall notify the applicant, in writing, citing the specific deficiencies and the specific requirements of this Chapter that have not been met.

ecf. Plan Distribution. The Director of Community Development shall forward one (1) copy each of the complete Master Plan-application to the Planning Commission, the Township Engineer, the Derry Township Municipal Authority, the Dauphin County Planning Commission, and other such consultants, agencies and boards as is deemed necessary to provide a comprehensive review of the materials.

fg. Deficient application. If the Director of Community Development determines that the plans and application do not meet numerous and/or significant requirements of the Township's Code of Ordinances, the Director of Community Development shall give the applicant an opportunity to withdraw the plan for correction and refiling, without an additional Township filing fee, unless an additional public notice is required, then the fee shall be equal to the cost of the notice. This allowance shall be permitted on a one-time basis.

F. Complete application. The Director of Community Development shall forward one (1) copy each of the complete Master Plan-application to the Planning Commission, the Township Engineer, the Derry Township Municipal Authority, the Dauphin County Planning Commission, and other such consultants, agencies and boards as is deemed necessary to provide a comprehensive review of the materials.

ggh. The site plansMaster Plan application shall include the following plans and information:

i. Property Map. This map shall show the boundaries of all land subject to Master Plan approval with the names, deed reference, recorded plan reference, and tax map parcel of all owners. The Property Map shall also show the names, deed reference, recorded plan reference, and tax map parcel of all abutting land owners and any platting of adjoining land to the Master Plan property.

ii. Site Development Plan. The plan shall be at a minimum scale of one (1) inch equals two-hundred feet, and depict the following information:

a. The name of the proposed development and names, phone number, email and addresses of the landowner, the developer and the persons who prepared the plan.
b. The proposed street pattern including the names, paving width and rights-of-way widths of all streets and the widths and locations of easements or areas to be dedicated.
c. The layout of lots, units, and/or parcels, where appropriate, including dimensions, lot areas, lot numbers and yard areas.
d. Preliminary Grading Plan for the entire site.
e. The location, predicted use, height, bulk and square footage for every proposed structure within the Master Plan development area.
f. The location of all off-street parking spaces and the total number of spaces to be provided, in accordance with the requirements of §225-401402 of this Chapter; provided however the applicant may propose shared parking in accordance with §225-401402.4.B.
g. The location, size and kind of improvements proposed for all common open space and recreation facilities, together with proposed ownership and maintenance arrangements for such open space.
h. A plan showing anticipated location and width of sidewalks, pedestrian walkways, trails, crosswalks, and bicycle paths.

iii. Zoning Map. This map shall be at a minimum scale of one (1) inch equals two-hundred feet, depicting the zoning classification of the development area and of all properties within 200 feet of the development area as all properties indicated on the property map.

iv. Topography Map. This map shall be at a minimum scale of one (1) inch equals one -hundred feet, depicting contours obtained from ground survey, PAMAP LiDAR or other equivalent source at 2' intervals and topography indicating all natural and man-made improvementfeatures thereon, including but not limited to buildings- and other improvements existing on any properties thereon or within 100' of the perimeter of the subject property.

v. Landscape Master Plan. This plan shall be at a minimum scale of one (1) inch equals one -hundred (100) feet depicting all existing wooded areas, bufferyards, screening, open space plantings and other areas required or intended to be vegetative.

vi. Wayfinding/Signage Master Plan. This plan shall include full color renderings which include all dimensions, height and material choice of all principal freestanding signage, as well as a site plan showing location of all freestanding signs.

vii. Soil Classification Map. This plan shall be at a minimum scale of one (1) inch equals one -hundred feet, identifying soils and listing limiting factors of applicable soils.

viii. Environmental Assessment Plan. This shall shall include all sensitive environmental features, steep slopes, wooded areas to be disturbed, soil classification and limiting factors, an environmental performances standards analysis in accordance with Appendix- D——— and a preliminary geotechnical report to the extent environmentally sensitive land is to be disturbed.

ix. The substance of anticipated covenants, grants, easements, restrictions and/or other proposed conditions.

x. The extent to which the proposed Master Plan varies from land use, setbacks, height, land disturbance, density, lot coverage and bufferyard requirements of this Chapter and other zoning and subdivision regulations otherwise applicable to the subject property in tabular form.

xi. A written narrative describing land characteristics, common facilities, utility service availability including fire flow requirements, existing covenants, setting forth the applicant's reason for filing a Master Plan and demonstrating how the Master Plan complies with the purpose of this Chapter. The narrative shall describe any deviation from the base zoning requirements and the reasons and advantages thereof. The narrative shall cite anticipated modifications of requirements of Chapter 185, Subdivision and Land Development, necessary for the design of the project. The narrative shall address the major features of the Master Plan and shall contain such non- land use information such as estimates of taxes to be paid to all local government units, estimates of municipal and school districts costs and a benefit analysis.

xii. Illustrative building types, elevations, building siting, typical cross section and rendering of front elevations of proposed buildings, at a minimum scale of one-eighth (1/8) inch equals one (1) foot.

xiii. Preliminary Architectural and Design Standards. The architectural and design standards shall set forth the requirements for exterior building materials, general site design and compatibility with abutting structures. The applicant shall set forth whether said requirements will be included in covenants running with the land and whether the applicant will retain design approval control.

xiv. Traffic Impact Study. A traffic impact study meeting the requirements of Chapter 185, Subdivision and Land Development.

xv. A tentative development schedule, where lot development is to be phased over a period of years, not to exceed seven (7) years, with an option for a 5 year extension thereof, from the date of Master Plan Approval, showing proposed times for the filing of land development applications for each lot or facility within the proposed Master Plan area.

xvi. Any other reports, plans or exhibits deemed necessary by the Township to determine compliance with the applicable requirements of this Chapter.

An environmental performances standards analysis in accordance with_____.

A preliminary geotechnical report to the extent environmentally sensitive land is to be disturbed.

Traffic Impact Study. A traffic impact study meeting the requirements of Chapter 185, Subdivision and Land Development

hi. The Master Plan shall consist of the following information:

Drawings at a scale no smaller than one (1) inch equals one hundred (100) feet and text needed to clearly show all of the following:

- The name of the proposed development and names, phone number, email and addresses of the landowner, the developer and the persons who prepared the plan.
- The proposed street pattern including the names, paving width and rights-of-way of all streets and the widths and locations of easements or areas to be dedicated.
- The layout of lots, units, and/or parcels, where appropriate, including dimensions, lot areas, lot numbers and building lines.
- Preliminary Grading Plan for the entire site.
- The location, predicted use, height, bulk and square footage for every proposed structure within the Master Plan development area.
- The location of all off-street parking spaces and the total number of spaces to be provided, in accordance with the requirements of §225-_____ of this Chapter; provided however the applicant may propose shared parking in accordance with §225-401.4.B.
- The location, size and kind of improvements proposed for all common open space and recreation facilities, together with proposed ownership and maintenance arrangements for such open space.
- A Landscaping Plan in accordance with §_____.
- A plan showing anticipated location and width of sidewalks, pedestrian walkways, crosswalks, and bicycle paths.

i. The following text or graphic materials:

The substance of anticipated covenants, grants, easements, or other restrictions proposed.

The extent to which the proposed Master Plan varies from land use, setbacks, height, land disturbance, density, lot coverage and bufferyard requirements of this Chapter and other zoning and subdivision regulations otherwise applicable to the subject property in tabular form.

A tentative development schedule, where lot development is to be phased over a period of years, not to exceed seven (7) years, with an option for a 5 year extension thereof, from the date of Master Plan Approval, showing proposed times for the filing of land development applications for each lot or facility within the proposed Master Plan area.

A written narrative describing land characteristics, common facilities, utility service availability including fire flow requirements, existing covenants, setting forth the applicant's reason for filing a Master Plan and demonstrating how the Master Plan complies with the purpose of this Chapter. The narrative shall describe any deviation from the base zoning requirements and the reasons and advantages thereof. The narrative shall cite anticipated modifications of requirements of Chapter 185, Subdivision and Land Development, necessary for the design of the project. The narrative should address the major features of the Master Plan and may contain such non- land use information such as estimates of taxes to be paid to all local government units, estimates of municipal and school districts costs and a benefit analysis.

Illustrative building types, elevations, building siting, typical cross section and rendering of front elevations of proposed buildings, at a minimum scale of one-eighth (1/8) inch equals one (1) foot.

Preliminary Architectural and Design Standards. The architectural and design standards shall set forth the requirements for exterior building materials, windows, general site design and compatibility with abutting structures. The applicant shall set forth whether said requirements will be included in covenants running with the land and whether the applicant will retain design approval control.

5. Required Land Development Plan Approvals.

Following Master Plan approval, an application for approval of a final subdivision and/or land development shall be submitted for each lot, section, or facility shown on the finally approved Master Plan. The Subdivision and/or Land Development Plan shall be submitted as a Final Plan pursuant to the procedural provisions of Chapter 185. In applying the procedural provisions of Chapter 185, the finally approved Master Plan shall be considered as, and have the standing of, a Preliminary Plan as cited therein.

a. The Master Plan Requirements design enabled by of this Section shall govern all setback, height, land limits of disturbance, density, lot coverage and bufferyard requirements of this Chapter.

b. In addition to the requirements of Chapter 185 for final plans, the final subdivision and/or land development application for a lot, section, or facility in the Master Plan development area shall include the material as outlined in Section 225-501.58403401.4.A.4.Gh.ii.a. through f. inclusive. Additionally, the Applicant shall submit supplementary data, which shall include:

i. Any covenants, grants of easements or other restrictions to be imposed on the use of land and structures.

ii. Provision for the maintenance, ownership and operation of all landscaping and bufferyard areas, common open spaces, private driveways, storm water management facilities and common recreation facilities. The provisions shall be

covenants running with the land and shall be in a form approved by the Township Solicitor. The Township shall be made a third party beneficiary and shall have the express right to enforce all terms relating to maintenance of any landscaping, bufferyard, common open space or recreation facilities.

6. Required Improvements.
The improvements required and the security to guarantee their installation shall be in accordance with Chapter 185 for each Master Planned lot, section, or facility. In addition thereto, if any other improvements, such as traffic enhancements or utility service, shown on the Master Plan are not to be installed as part of the development of the lot or facility applied for, the applicant shall submit reports showing what, if any, portion of the traffic, utility or other improvements are required to support or mitigate the impact of such lot or facility being approved. The applicant shall be responsible for final design approval and security to guarantee the installation of all such additional improvements related to the lot or facility for which they seek approval or, in lieu thereof, may complete all Master Plan improvements.

7. Master Plan uses and site requirements.

a. Uses. Only those uses permitted in the underlying zoning district(s), or as listed below, may be permitted in a Master Plan area. Uses proposed may include:

i. Uses by-right.
ii. Special exception uses.
iii. Uses permitted in any subject Overlay.
iv. Conditional uses, excluding "other uses" and “similar uses” unless approved by the Board of Supervisors as part of the Master Plan approval process.
v. Apartment uses which may be permitted above the first/ground floor of a building subject to the additional requirements of subsections (b), (c) and (d) below §_____.

b. Density Bonus~~es~~. For those applicants/owners that complete the Master Plan approval process, the permitted residential densities of the underlying base zoning district may be increased by up to the following percentages:

i. Single Family Detached, Semidetached and Two-family Dwellings: 40%
ii. Single Family Attached Dwellings (Townhouses): 35%
iii. Apartment and Senior Apartment Dwellings: 25%

~~densities of the underlying base zoning district may be increased by _____25%.~~

c. Impervious ~~c~~Cover ~~b~~Bonus. For those applicants/owners that complete the Master Plan approval process, impervious coverage shall be permitted to be considered over the entire gross site area. In addition, the permitted impervious coverage may be increased by up to 10% of the underlying base zoning district requirements. ~~to consider additional incentives that are applicable for commercial uses ???~~

~~c~~d. Bulk and Area Requirements. Property subjected to Master Plan conditional use approval shall, at the time of first approval, meet the following Bulk and Area requirements:

i. Minimum ~~Building Setback~~Yard Areas. The minimum ~~setback~~yard area requirements for the perimeter of a Master Planned Development shall comply with the minimum setback requirements of the underlying zoning district.
ii. Minimum Bufferyards. A minimum of Class 1 or Class 2 buffer yards, as specified in §225-402 shall be provided on all Master Plan boundaries, except where the

boundary abuts land in the Hershey Mixed Use and/or Palmdale Mixed Use zoning districts, in which case, a minimum of Class 5 or Class 6 buffer yards shall be provided. No buffer yard is required under this Section where a Master Plan boundary abuts a street.

iii. Height Regulations. The maximum height of a residential structure shall not exceed the base height of the zoning district to which the tract is located. Nonresidential and mixed-use buildings shall be permitted to be constructed to sixty-five (65) feet, norprovided such height increase shall notit interfere with the Airport Safety Zone overlay, in accordance §225-401.3_____.

de. Off Street Parking. Off street parking spaces shall comply with §225-401402.5 of this Chapter; provided however the applicant may propose shared parking by agreement of the users in accordance with 225-401402.4.

B.

ef. Common driveways.

ii. Common driveways constructed to a minimum width of 24 feet shall be provided, with paving standards meeting the requirements for a Minor Street as required by Chapter 185, Subdivision and Land Development. Lots having frontage on a common driveway shall have their required lot width calculated at the right-of-way line of the common drive in the same method as if the common drive were a public street.

iii. Common driveways shall be owned in common by all property owners of the development and shall be part of the common open space; however, a 42-foot minimum right-of-way shall be established for each common driveway. Common driveways shall be centered on the street right-of-way.

iv. Common driveways shall connect only to a public street.

8. Master Plan open space.

a. Common open space is encouraged in a Master Plan. The common open space shall be so dedicated or otherwise preserved and maintained so as to always remain open and available for use by the occupants of the development area. The land and facilities to be used for common open space may be acceptable if either of the following conditions is met:

i. The land and facilities shall be dedicated to a public association or the Township, or an easement created for public use, with the accepting public body agreeing to operate and maintain the dedicated land and facilities for the originally intended use.

ii. The land and facilities shall be deeded to an organization representing the landowners of the development. The organization shall covenant to operate and maintain the land and facilities for their originally intended use. The organization shall not be dissolved nor shall it dispose of the common open space, by sale or otherwise, without first offering to dedicate the common open space to the public and guaranteeing to the Township's satisfaction that the maintenance of the common open space will continue. The Township is under no obligation to accept dedication of this common open space for public use.

b. Common open space maintenance.

i. The applicant may propose covenants containing substantially the same provisions as set forth in §501-501.43; or

ii. The applicant shall establish maintenance and operation requirements common to all lots in the Master Plan area and provide for easements, covenants and restrictions in recordable form, which will guarantee future maintenance and operation. Such covenants, easements, and restrictions shall be in a form and substance approved by the Township Solicitor.

c. Bufferyard and common landscaping. The bufferyards and common landscaping shown on the approved Master Landscaping Plan shall be maintained in one or a combination of the following ways:

i. By the developer, if the lots or units are not sold, and/or

ii. By the landowner, if the lots or units are sold, and/or

iii. By a Homeowners Association or Condominium Owners Association required to manage common open space, if the same has been created, and/or

iv. By a similar such organization if there is no common open space.

9. Public improvements.

All streets, sidewalks, trails, walkways, bicycle paths, lighting and drainage facilities therewith shall be designed and constructed in accordance with this Chapter and with the requirements of Chapter 185, Subdivision and Land Development and Chapter 174, Stormwater Management and all other applicable standards, regulations and requirements.

10. Variances, and Modifications and Alterations to the Master Plan.

a. When approving a subdivision and/or land development plan within an approved Master Plan area on an individual lot as a subdivision and/or land development plan, the Board of Supervisors, upon the request of an applicant, may approve special, reasonable modifications thereto as will not be contrary to the public interest. Where a special, reasonable modification is requested by an applicant, the procedure outlined by Article IX of Chapter 185, Subdivision and Land Development, for granting modifications shall be strictly adhered to and followed.

b. Any variances of the zoning requirements except as authorized in this Section, shall only be made by the Zoning Hearing Board as a variance, if requested by an applicant.

c. All those provisions of the Master Plan relating to the operation of the Master Plan property authorized to be enforced by the Township under this Section may be modifiedaltered, removed or released by the Township, except grants or easements relating to the service or equipment of a public utility. To ensure the integrity of the subdivision and/or land development plan and to guarantee that modifications permitted in the Master Plan process do not adversely affect the public interest, the enforcement and modification of the provisions of the subdivision and or land development plan as finally approved, whether they are recorded by plat, covenant, easement or otherwise, are subject to the following conditions:

i. No such modification, removal or release of any provision of the Master Plan by the Township shall affect the rights of the owners or tenants of any Master Plan development to maintain and enforce those provisions, at law or in equity, as provided in this Chapter.

ii. No modification, removal or release of any provision of the Master Plan by the Township shall be permitted except upon the findings by the Board of Supervisors or its designee, following public notice. These findings must indicate that the changes are consistent with the following:

a. eEfficient development and preservation of the entire Master Plan area, d
b. Do not adversely affect the enjoyment of land abutting or across the street from the Master Plan development or
c. Do not adversely affect the public interesthealth, safety, welfare or other public interests in the Master Plan development;
d. andThe modification has not been requested are not granted solely to confer a special benefit upon any person.

iii. The applicant may propose, and the Board of Supervisors may consider, modifications to the planting scheme contained within the Master Landscaping Plan from time to time provided, however, the intent of the Master Landscaping Plan is maintained and the bufferyard screening is not unduly diminished.

d. From time to time, the use of any structure(s) on a Master Plan lot may be changed to another use permitted in the district upon approval of an occupancy permit in accordance with the Township Code of Ordinances and the following:

i. Where the proposed use is a special exception or conditional use, the change must be submitted to the appropriate board for review and approval.
ii. Express conditions of a conditional use or special exception shall not conflict with the finally approved Master Plan.
iii. Where changes in elements of the Master Plan are necessary to meet the express conditional use conditions, the applicant shall process a revised Master Plan showing the conflicts between the conditional use's conditions and the Master Plan requirements and requesting approval of the revised Master Plan in accordance with this section.
iv. Where changes of a Master Plan are required and a new conditional use is also requested, the applications may be combined into a single proceeding.
vii.v. Where changes of a Master Plan are required to enable a special exception, the Master Plan update must first be approved by the Board of Supervisors prior to Zoning Hearing Board approval.
vi. Any changes in the physical layout of a Master Plan lot shall only be approved as part of a land development plan, unless the Zoning Officer determines the same is in compliance with the following:

1. Permitted modifications

a. General site layout - Minor revisions to the layout are permitted so long as the internal traffic patterns and principal building locations are substantially[BJW24] the same. Substantially the same refers to: not having fewer or a lesser number of buildings, lots, houses, and/or amount of acreage; and/or not having a difference of ±10% length of road, greater than 5% number of parking spaces; and/or not relocating a bike path to a different right-of-way than what was illustrated on the original application.

b. Building footprint - No more than 2,500 sq. ft. of additional principal floor area may be added to a proposed building.
c. Parking – The site must be able to support the minimum parking requirements of the proposed use(s).
d. Traffic - The modification shall not increase peak hour trips to the site by more than 2%; or, when a traffic study was not required as a part of the original submission, cause the project to exceed 100 peak hour trips.
e. Stormwater – The modifications must be approved by the Township Engineerin accordance with Chapter 174, Stormwater Management, and must be recorded on a post construction as-built plan.
f. Impervious cover - The modifications must be zoning code compliant and the stormwater controls must be able to handle any additional runoff.No modification is permitted which is in excess of the approved Master Plan for the area being altered.
g. Site access – Driveways must be in substantially the same location as shown on the approved plan. Any major driveway modification that is the result of a Federal, State or local agency shall be permitted.
h. Site lighting – Revisions are permitted when the aApplicant must provides a revised plan that is sealed by a professional engineer, showing that the lighting continues to comply with the Subdivision and Land Development Ordinance (SALDO) and Zoning Ordinance (ZO) requirements.
i. Sanitary sewer – Modification must be approved by DTMA or the Township Sewage Enforcement Officer as appropriate.

2. Prohibited modifications with filing a Land Development Plan.

a. Dwelling units – No additional dwelling units may be proposed.
b. New buildings – No additional principal buildings of any size or accessory buildings greater than 1,000 sq. ft. may be proposed.
c. Health, safety and wellbeing – No modification that would reduce the health, safety and wellbeing of the public; or, that is otherwise contrary to the Township's Comprehensive Plan shall be permitted under this policy.
Waivers – All waivers of the SALDO requirements are subject to Planning Commission (PC) recommendation and Board of Supervisor (BOS) approval.
d. Conditions of land use approvals – Modifications to the plan may not expand, enlarge of violate any conditions of plan approval or conditions of zoning relief without first also applying for and obtaining approvals for the proposed modification from either the Zoning Hearing Board (ZHB) or BOS, as may be applicable to the project.

3. Documents to provide for Master Plan alterations (as applicable)

a. Revised plans, in accordance with the requirements of Section 225-501.587.A.4.h, as applicable and necessary to show the features as approved and as modified.
b. Agreement to pay for any required engineering or third party reviews.
c. Revised Stormwater Management Plan, report and details of any alterations to a system or qualifying modifications.

d. Traffic impact analysis detailing modifications to peak hour and overall trips.
e. Revised lighting plan with professional certification that the modifications continue to comply with the SALDO and ZO requirements.
f. Recordable documents to memorialize any modifications to easements or right-of-ways.
g. A detailed narrative documenting all plan modifications.
h. All other information as may be necessary to understand and review the modifications.

4. Other Actions which may be Necessary.

a. Approval by Dauphin County Conservation District (DCCD)/DEP for modifications to the Post Construction Stormwater Management (PCSM) Plan, National Pollutant Discharge Elimination System (NPDES), and or other such approvals.
b. ~~Reduction~~Revisions to financial security amount (whether increased or decreased). Must be recommended by Township Engineer and approved by BOS prior to building/zoning permit issuance.
~~Increase to financial security amount. Must be recommended by Township Engineer and approved by BOS and in place prior to building/zoning permit issuance.~~
c. Design Advisory Board approvals if required.
d. Other outside agency approvals as may be necessary.

11. ~~Enforcement~~Effect of Approvals.

a. Provisions in favor of the Township. An express provision of, or commitment in, the Master Plan relating to the use, bulk and location of buildings and structures, the quantity and location of common open space, except as otherwise provided in this Article, and the intensity of use shall run as a covenant over the land in favor of the Township. As provided by law, these provisions shall be enforceable in law or in equity by the Township without limitation on any powers of regulation otherwise granted the Township by law.

b. Release of rights. Owners of the lots or facilities may, to the extent and in the manner expressly authorized by the provisions of the Master Plan, modify, remove, or release their rights to enforce the provisions of the Master Plan, but no such action shall affect the right of the Township to enforce the provisions of the Master Plan as approved and in accordance with the provisions of this Chapter.

§225-502. Specific Criteria For Special Exception Uses.

A. It is the intent of this article to set forth the specific conditions that apply to the grant of a special exception by the Township Zoning Hearing Board pursuant to the regulations set forth in §225-1007.10.

B. In addition to the minimum conditions contained in the performance standards of each special exception use, the applicant must demonstrate that the following conditions have been addressed to the maximum extent applicable:

1. The Township Zoning Hearing Board shall find that the use will not adversely affect the health or safety of residents in the neighborhood or district in which the use is located.

2. The Township Zoning Hearing Board shall find that the use will not overburden existing public services, including water, sanitary sewer, public roads, storm drainage or other public improvements.

3. The Township Zoning Hearing Board shall find that the use will not be detrimental to the use or development of, or change the essential character of, the neighborhood or district in which the use is proposed. The Township Board of Supervisors shall consider, at a minimum, the impact of noise, dust, light, odor and adequacy of parking.

4. The use shall meet all other requirements of this Chapter that may apply.

5. The minimum lot area shall be one acre when the use relies on an on-lot septic system.

C. The Township Zoning Hearing Board may attach such reasonable conditions to the grant of a special exception to implement the policy, goals and community development objectives of this Chapter as described in Article I, §225-3.

§225-502.1. Bed & Breakfast Home.

A. All lots to contain a Bed and Breakfast Home shall be compliant with all applicable lot criteria of the Zoning District.

B. To maintain consistency between established and proposed development, parking on the lot shall not be located between the front facade and front lot line.

C. No more than 5 bedrooms may be available or used for such use in any building.

D. Not more than 1 ground sign shall be permitted on the lot, and shall meet the dimensional requirements of §225-_____.

E. Meal service shall be limited to breakfast only to overnight guests of the facility.

F. All off-street parking spaces shall be provided on the lot. The number of off-street parking and loading spaces shall be provided as defined by this Chapter. Except in the Conservation District, aAll parking spaces and driveways shall be surfaced with bituminous, brick, concrete or stone block paving material.

G. The owner and/or manager of the facility shall reside therein.

H. An overnight guest shall not occupy the facility for more than fourteen (14) consecutive nights in a thirty (30)-day period.

§225-502.2. Farm Home Occupations.

A. The minimum lot area shall be 10 acres.

B. In addition to any residents of the farm home, only two persons who do not reside in the farm home shall be employed in the farm home occupation.

C. The occupation shall be an occupation which has historically been conducted on a farm as a secondary occupation to the main farming occupation.

D. At least 5 acres of the lot area must be actively used for agricultural purposes.

E. Not more than two farm home occupations may be conducted on each farm.

F. The farm home occupation may or may not be conducted within the dwelling, but in no situation shall the area of the farm home occupation or occupations exceed an area equivalent to 50% of the area of all floors of the dwelling.

G. Any activities which produce noxious dust, odor, light or noise to the degree that the reasonable use or enjoyment of adjacent properties is impaired, shall be prohibited.

H. Off-street parking and loading and unloading facilities shall be provided in accordance with Section 225-401402, except that such areas shall be located at least 50 feet from any public street right-of-way line or property line.

I. No outdoor storage of supplies, inventory, or materials related to the farm home occupation shall be permitted.

J. The Township Zoning Hearing Board shall find that the use will not adversely affect the health or safety of residents in the neighborhood or district in which the use is located.

K. The Township Zoning Hearing Board shall find that the use will not overburden existing public services, including water, sanitary sewer, public roads, storm drainage or other public improvements.

L. The Township Zoning Hearing Board shall find that the use will not be detrimental to the use or development of, or change the essential character of the neighborhood or district in which the use is proposed. The Township Zoning Hearing Board shall consider, at a minimum, the impact of noise, dust, light, odor and adequacy of parking.

M. The use shall meet all other requirements of this Chapter that may apply.

§225-502.3. Family Child Care Home.

~~A. The minimum lot area shall be one acre when the use relies on an on-lot septic system.~~

~~B.~~A. The family child care use shall be subordinate to the use of a home as a single-family detached dwelling.

~~C.~~B. The family child care use shall care for no more than six children at one time, including those residing in the home under the age of 16 years.

~~D.~~C. An outdoor play area shall be provided on site at a minimum rate of 100 square feet per child, including those residing in the dwelling. Off-street parking facilities shall not be used as outdoor play areas. The outdoor play areas shall be located at least 25 feet from any property line or street right-of-way line. Outdoor play areas shall be completely enclosed with a four foot high fence with all gates being self-closing.

~~E.~~D. No more than one person not residing in the dwelling shall be employed by and work at the family child care home.

~~F.~~E. In addition to the parking spaces required in Section 225-401402 for single-family detached dwellings, two additional off-street parking spaces shall be provided in accordance with the provisions of Section 225-401402 as they relate to commercial parking spaces.

~~G.~~F. The family child care use shall provide care only for children between birth and the age of seven, except for children who reside permanently within the home.

H.G. The dwelling shall remain unaltered from the exterior so as not to appear as anything other than a traditional single-family detached dwelling.

I.H. The hours of child care operation for children other than those residing in the home shall be no earlier than 6:00 a.m., and no later than 10:00 p.m.

J.I. The child care use shall comply with all applicable County, State and Federal regulations which may apply.

K.J. The dwelling shall be served by public sanitary sewage facilities, or shall have a septic system designed to accommodate a sewage flow from a home having one bedroom more than actually exists within the home for each 2 day care children who do not reside in the home.

L.K. The Township Zoning Hearing Board shall find that the use will not adversely affect the health or safety of residents in the neighborhood or district in which the use is located.

M.L. The Township Zoning Hearing Board shall find that the use will not be detrimental to the use or development of, or change the essential character of, the neighborhood or district in which the use is proposed. The Township Zoning Hearing Board shall consider, at a minimum, the impact of noise, light and adequacy of parking.

N.M. The use shall meet all other requirements of this Chapter that may apply.

§225-502.4. Campgrounds.

A. The minimum lot area shall be 10 acres.

B. All campsites shall be located at least 75 feet from any arterial road right-of-way line.

C. Off-street parking shall be provided in accordance with Section 225-401402.

D. All outdoor recreation areas and any campground accessory uses shall be set back 75 feet from any arterial road right-of-way line, and shall be provided with a Class 1 or Class 2 landscaped buffer designed to the specifications of §225**-402**.

E. All campgrounds shall be served by a public sanitary sewer system.

F. All water facilities, sewage disposal systems, rest rooms and solid waste disposal facilities shall be approved and maintained in accordance with the requirements of the Pennsylvania Department of Environmental Protection.

G. All lighting shall be arranged and shielded so that no glare or direct illumination shall be cast upon adjacent properties or public streets.

H. The maximum length of time that a guest may stay at a campground is 30 days of any 90 day period of time.

I. The Township Zoning Hearing Board shall find that the use will not adversely affect the health or safety or residents in the neighborhood or district in which the use is located.

J. The Township Zoning Hearing Board shall find that the use will not overburden existing public services, including water, sanitary sewer, public roads, storm drainage or other public improvements.

K. The Township Zoning Hearing Board shall find that the use will not be detrimental to the use or development of, or change the essential character of the neighborhood or district in which the use is proposed. The Township Zoning Hearing Board shall consider, at a minimum, the impact of noise, dust, light, odor and adequacy of parking.

L. The use shall meet all other requirements of this Chapter that may apply.

§225-502.5. Communication Antenna, Towers >50 feet in height. (C, GC, PCN, PCS, MCC, CR, CG, PMU, LC & I Zoning Districts).

A. The applicant shall demonstrate compliance with the general design requirements of §225-420, in addition to the requirements of this section.

B. Height requirements. Communications towers, including attached antennas, shall be kept to the minimum height needed to function in accordance with industry standards; however, in no case shall any communications tower exceed a maximum height of 150 feet.

C. Location and setback requirements.

1. Communications towers shall have a minimum yard area, for all yards, that is equal to the height of the tower, including all antennas.

2. Communications towers shall be located a minimum of 500 feet from the Suburban Residential, Village Residential, Attached Residential, and Multifamily Residential zoning districts, as well as a minimum of 500 feet from an existing dwelling or a dwelling lot approved by the Township as part of a subdivision or land development plan.

3. Communications towers in excess of 50 feet in height shall not be permitted to be located in a street right-of-way.

D. Siting report. The applicant proposing construction of a new communications tower shall demonstrate that a good faith effort has been made to obtain permission to mount the communications antennas on an existing communications tower, building, or other suitable structure within the boundaries of the Township and within 1 mile of the perimeter of the Township. A report shall be submitted with the application for permit approvals, demonstrating that the following requirements have been considered:

1. The applicant shall demonstrate that the tower is necessary to fill a gap in current coverage, or that a lack of adequate capacity is likely to exist within one year of the filing of the application for a new tower, and that the only possibility of closing this gap in coverage or providing adequate capacity is to construct a new tower facility.

2. The applicant shall demonstrate that there is no existing communications tower, building, or other suitable structure available within a one-mile radius of the proposed location of the tower on which the communications antennas can be located or co-located that would adequately fill the gap in coverage or provide the necessary capacity, as the case may be.

3. The applicant shall demonstrate that the proposed location is the least intrusive of the properties studied; that it will not impact any sensitive environmental areas under §225-188 of this chapterChapter; and that it will not negatively affect public safety with regards to structure failure, falling ice, or other debris which may become detached from the facility.

E. Communications towers, communications antennas, and communications ancillary equipment shall be made of materials consisting of a neutral color or a color that blends well with natural surroundings; such as, a low gloss light gray, light blue, or light green color,

unless other colors are required by the Federal Communications Commission or Federal Aviation Commission.

F. Applicant shall demonstrate that sufficient area containing a durable, all-weather surface, will be provided to accommodate parking and turnaround space for all anticipated maintenance and service vehicles to the communications antenna site, without impeding access to other public areas, such as parking and vehicular or pedestrian access areas, or that would otherwise prevent a reduction to the minimum number of off-street parking spaces required for other uses on the site.

G. Ground-mounted communications ancillary equipment.

1. Ground-mounted communications ancillary equipment may be established as part of the communications tower. The equipment and structures shall comply with the yard area requirements of the underlying zoning district in which the equipment is to be located. Where yard areas have been established for a detached accessory use, the equipment structures shall comply with these requirements so long as the equipment is to be freestanding or attached to another accessory use structure. Where no yard areas have been established for a detached accessory use, or if the equipment structures are attached to a principal use structure, the yard areas shall comply with the underlying zoning district for a principal use. A communications tower is to be considered a principal use structure.

2. A fence shall be required around all components of the communications ancillary equipment location and shall be a minimum height of 8 feet. The fence shall be consistent with the provisions of §225-____ of this chapterChapter. Gates shall be locked, except during such times as the communications equipment is manned by operations or maintenance personnel.

3. An evergreen screen shall be required to surround the communications ancillary equipment and fence. The screen shall consist of a row of evergreen trees which shall be planted at a maximum spacing of 8 feet, center to center. The evergreen screen shall be a minimum height of 4 feet at planting and shall be a species that is expected to grow to a minimum height of 15 feet at maturity. In addition, existing vegetation which would aid in screening at and around the site shall be preserved to the greatest extent possible.

A. The applicant shall demonstrate compliance with the general design requirements of §225-419.B, in addition to the requirements of this section.

B. Height requirements. Communications towers, including attached antennas, shall be kept to the minimum height needed to function in accordance with industry standards; however, in no case shall any communications tower exceed a maximum height of 150 feet.

C. Location and setback requirements.

1. Communications towers shall have a minimum yard area, for all yards, that is equal to the height of the tower, including all antennas.

2. Communications towers shall be located a minimum of 500 feet from the R-1, R-2 and R-3 zoning districts, as well as a minimum of 500 feet from an existing dwelling or a dwelling lot approved by the Township as part of a subdivision or land development plan.

3. Communications towers in excess of 50 feet in height shall not be permitted to be located in a street right-of-way.

D. Siting report. The applicant proposing construction of a new communications tower shall demonstrate that a good faith effort has been made to obtain permission to mount the

communications antennas on an existing communications tower, building, or other suitable structure within the boundaries of the Township and within 1 mile of the perimeter of the Township. A report shall be submitted with the application for permit approvals, demonstrating that the following requirements have been considered:

1. The applicant shall demonstrate that the tower is necessary to fill a gap in current coverage and that the only possibility of closing this gap in coverage is to construct a new tower facility.

2. The applicant shall demonstrate that there is no existing communications tower, building, or other suitable structure available within a one-mile radius of the proposed location of the tower on which the communications antennas can be located or co-located.

3. The applicant shall demonstrate that the proposed location is the least intrusive of the properties studied, relative to the tower design and possible alternatives; that it will not impact any sensitive environmental areas under §225-403.2.1188 of this chapter; and that it will not negatively affect public safety with regards to structure failure, falling ice, or other debris which may become detached from the facility.

E. Communications towers, communications antennas, and communications ancillary equipment shall be made of materials consisting of a neutral color or a color that blends well with natural surroundings, such as a low gloss light gray, light blue, or light green color, unless other colors are required by the Federal Communications Commission or Federal Aviation Commission.

§225-502.6. Conference & Meeting Centers. [BJW25] **(C zoning district).**

A. Parking for Conference & Meeting Centers shall be provided at the rate of one space for every two seats.

B. Lodging and/orfor patrons is not permitted on-site.

B.C. pPreparation of food on-site shall not be permitted on-site, except to serve the patrons of the center.

§225-502.7. Guest Lodging, Dining & Conference Facilities. (HMU zoning district).

A. Specific uses allowed are as follows:

1. Guest lodging facilities, similar in nature to hotel/motel accommodations.

2. Dining facilities for food service.

3. Teaching and educational conference facilities.

B. Specific standards.

1. Lodging and dining facilities must be restricted for use by the conference facility.

2. Parking for lodging facilities shall be provided in accordance with §225-401402, with the number of spaces determined in accordance with standards applicable to "motel, hotel.".

3. Parking for teaching or conference facilities shall be provided at the rate of one space for every two 4 seats.

§225-502.8. Membership Clubs. (GC & CR zoning districts).

A. Off-street parking and loading and unloading facilities shall be provided in accordance with the provisions of §225-401402.

B. Outdoor activity areas shall meet the yard area requirement of the zoning district in which the use is operated.

§225-502.9 Reserved.Amusement Park Ride Height Exception.[BW26] (Hersheypark Overlay zoning district).

Amusement rides located in an amusement, theme or water park to be erected to a height in excess of 200 feet but no more than 350 feet subject to the following criteria:

A. **The amusement ride shall be located a minimum of 1/2 of the ride height from the park property lines.**

B. **The applicant shall demonstrate to the Township Zoning Hearing Board's satisfaction that the ride will comply with A.S.T.M. F770-8815, as may be amended, Standard Practice for Ownership, Operation, Maintenance, and Inspection of Procedures for Amusement Rides and Devices et seq.**

C. **The applicant shall demonstrate to the Township Zoning Hearing Board's satisfaction that the ride will accommodate the retrieval of patrons of the ride in a safe and expedient manner during emergency conditions.**

D. **The applicant shall demonstrate to the Township Zoning Hearing Board's satisfaction that an amusement ride of such a height is an industry normality and is necessary to remain competitive with similar amusement, theme or water parks.**

E. **The Township Zoning Hearing Board shall find that the amusement ride a height in excess of 200 feet will not create more of a negative impact with regard to noise, lighting or general aesthetic value, to the extent that it will be detrimental to the use or development of, or change the essential character of the area in which the use is proposed than what an amusement ride of 200 feet would create if the special exception was not granted.**

§225-502.910 Accessory Dwelling Units. (All zoning districts).

A. The Township Zoning Hearing Board may grant a special exception to permit the establishment of an accessory dwelling unit if the Township Zoning Hearing Board determines that such a dwelling unit does not adversely affect the health, safety or welfare of the general public, or adversely affect the use and value of other properties in the area of the accessory dwelling unit, and also determines the accessory dwelling unit will meet all of the following minimum criteria. The Township Zoning Hearing Board may attach such reasonable conditions to the grant of a special exception to implement the policy, goals and community development objectives of this Chapter as described in Article **I, §225-3**.

1. An One accessory dwelling unit may be established when accessory to a single-family detached, a semidetached, a single-family attached or a two-family detached dwelling unit.

2. The individual dwelling unit to which the accessory dwelling unit is subordinate shall contain a minimum of 1,200 square feet of floor area prior to the establishment of the accessory dwelling unit, if the accessory dwelling unit is located within the dwelling unit to which it is subordinate.

3. The accessory dwelling unit shall contain not more than 50% of the floor area of the dwelling unit to which the accessory dwelling unit is subordinate. In cases where an accessory dwelling unit is located within the dwelling unit to which the accessory unit is

subordinate, the 50% criteria shall apply to the area of the dwelling unit which will exist after the establishment of the accessory dwelling unit.

4. The minimum gross lot area which must exist to establish an accessory dwelling unit shall be 9,000 square feet.

5. An accessory dwelling unit shall be occupied by not more than two persons.

6. The primary occupation of at least one occupant of an accessory dwelling unit shall be to provide health care, domestic housekeeping services or horticultural services for the resident/owner of and on the site of the dwelling unit to which the accessory dwelling unit is subordinate, unless the occupant or occupants of the accessory dwelling unit is (are) related by blood or marriage to the resident/owner of the dwelling unit to which the accessory dwelling unit is subordinate.

7. The person(s) providing the health care, domestic housekeeping or horticultural services may or may not receive compensation for their services.

8. An accessory dwelling unit shall comply with all applicable building codes and any other applicable regulations.

9. One off-street parking space shall be provided on the premises for each accessory dwelling unit in addition to the two off-street parking spaces required for the dwelling unit to which the accessory dwelling unit is subordinate.

10. Accessory dwelling units shall be located within or attached to the dwelling unit to which the accessory dwelling unit is subordinate, or within an accessory structure located on the premises which complies with current requirements for accessory structuresthe Township Building Code for habitable structures.

11. Applicants proposing to establish an accessory dwelling unit(s) on properties relying on on-site sewage disposal systems shall be required to modify the existing on-site sewage disposal system, or to install a new on-site sewage disposal system, to accommodate additional sewage flow from the accessory dwelling unit(s), unless the applicant can demonstrate that the existing on-site sewage disposal system is adequate to accommodate the additional flows from the accessory dwelling unit(s).

12. Applicants shall be willing to execute a recordable agreement between the property owner and the Township, assignable to the property owner's heirs and successors, which shall be drafted, executed and recorded in the Dauphin County Courthouse. Said agreement shall clarify that the future use of the accessory dwelling unit(s) shall not be for any nonconforming use, residential or otherwise, if the use specifically authorized by the Township Zoning Hearing Board ceases to exist, and that the property owner and Township agree that no variance will be granted by the Township Zoning Hearing Board to allow the use of the accessory dwelling unit(s) for other nonconforming purposes in the future.

B. The following special criteria shall apply when establishing an accessory dwelling unit(s):

1. The Township shall notify the Derry Township Municipal Authority of the proposed establishment of an accessory dwelling unit when located in an area served by on-site water supply systems and which is located in an area which is served by public sanitary sewers, so that the Derry Township Municipal Authority may adjust sewage charges, if deemed necessary, to reflect additional sewage flows anticipated to emanate from the accessory dwelling unit(s).

2. Accessory dwelling units shall not be considered to be a separate dwelling unit for purposes of determining residential density.

§225-502.101 Sign Area Relief. (All sign overlay districts).

1.A. The applicant must demonstrate that unique conditions exist on the property or in the immediate area of the property which would cause signs of the normally prescribed areas size or location to be of lower communication value than that which would exist on another property in the same Sign District.

2.B. The modification of the sign regulations must be the least necessary to afford the relief.

3.C. The proposed sign must not be a type of sign that would otherwise only be permitted in non-street fronting conditions.

§225-502.1112 Compact Car Parking. (All zoning districts).

A. The Township Zoning Hearing Board may grant a special exception to permit greater than 20% of the parking spaces within a parking lot containing more thn 50 spaces to be designed under the compact size and space requirements of, §225-401402.2, Design and Construction Standards, provided the following requirements are met:

1. A maximum of 40% of the parking space may be designed as compact parking spaces.

2. Applicant must demonstrate that incentives are provided to employee and visitors to encourage the use of compact vehicles.

3. Compact parking spaces must be clearly identified by signage.

Article VI
Nonconformity Regulations

§225-601 Continuance of Nonconformities.[BJW27][SS28]

Except as otherwise provided in this Chapter the use of land, buildings and structures that legally existed prior to the adoption of this Chapter but which does not conform to the provisions of this Chapter, may be continued; provided, that a nonconformity has not been discontinued for a period of one year or longer. Vacating of the land, buildings or structures, or nonoperative status, shall be conclusive evidence of discontinuance.

§225-602 Expansion or Alteration of Nonconforming Uses of Land, Buildings or Structures.

A. An expansion of a nonconforming use of land, building or structure shall only be permitted if the proposed expansion:

1. Is limited to a distance of 100 feet from the existing nonconformity as it existed on January 26, 1993.

2. Is limited to an increase of floor area or land use area of 25% or less than the floor area or land use area which existed on January 26, 1993.

3. Is confined to the lot on which it was located on January 26, 1993.

4. Does not violate any parking, loading, minimum area, height, vegetative cover, impervious cover, floodplain and/or buffer requirements set forth in this Chapter, unless additional relief in the form of a variance is requested and approved by the Zoning Hearing Board.

5. Existing nonconforming uses of land, buildings or structures that encroach upon current minimum front, rear or side yard areas may be expanded, provided the expansion is attached to the existing nonconforming use of land, building or structure. The expansion may be extended into the nonconforming yard area, provided the extension does not worsen the existing encroachment; and that such encroachment into a normally required yard area shall be limited to an increase of 75% of the horizontal length of the building wall, or other use area, that encroaches into the yard area. In the side and rear yards, the encroachment shall be limited to 75% of the vertical height of the existing encroachment. The amount of existing encroachment and the proposed encroachment shall be measured along a line parallel to the lot line adjacent to the yard area being encroached upon.

5. Does not encroach upon currently required yard areas, except that an existing nonconforming use of land, building or structure, which encroaches upon current minimum front, rear or side yard requirements, may be expanded, if attached to the existing nonconforming use of land, building or structure, into a yard area to the same dimension as the existing encroachment; provided, that such encroachment into a normally required yard area shall be limited to an increase of 75% of the horizontal length in each yard. In the side and rear yards, the encroachment shall be limited to 75% of the vertical height of the existing encroachment. The amount of existing encroachment and the proposed encroachment shall be measured along a line parallel to the lot line adjacent to the yard area being encroached upon.

B. The Township Zoning Hearing Board may grant a special exception to expand a nonconforming use of land, a nonconforming building and/or a nonconforming structure in excess of 25% but not more than 50% of the floor area or land use area which existing on

January 26, 1993, when the Township Zoning Hearing Board finds that the proposed expansion:

1. Is limited to a distance of 250 feet from the existing nonconformity as it existed on January 26, 1993.

2. Is limited to an increase of floor area or land use of not more than 50% of the floor area or land use area which existed on January 26, 1993.

3. Is confined to the lot on which it was located on January 26, 1993.

4. Does not violate any parking, loading, minimum area, height, vegetative cover, impervious cover, floodplain and/or buffer requirements set forth in this Chapter, unless additional relief in the form of a variance is requested and approved by the Zoning Hearing Board.

4. Does not violate any parking, loading area, height, density, vegetative cover, impervious cover, floodplain and buffer requirements set forth in this Chapter.

5. Existing nonconforming uses of land, buildings or structures that encroach upon current minimum front, rear or side yard areas may be expanded, provided the expansion is attached to the existing nonconforming use of land, building or structure. The expansion may be extended into the nonconforming yard area, provided the extension does not worsen the existing encroachment; and that such encroachment into a normally required yard area shall be limited to an increase of 75% of the horizontal length of the building wall, or other use area, that encroaches into the yard area. In the side and rear yards, the encroachment shall be limited to 75% of the vertical height of the existing encroachment. The amount of existing encroachment and the proposed encroachment shall be measured along a line parallel to the lot line adjacent to the yard area being encroached upon.

5. Does not encroach upon currently required yard areas, except than an existing nonconforming use of land, building or structure which encroaches upon current minimum front, rear or side yard requirements may be expanded, if attached to the existing nonconforming use of land, building or structure, into a yard area to the same dimension as the existing encroachment; provided, that such encroachment into a normally required yard area shall be limited to an increase of 75% of the of the horizontal length in each yard. In the side and rear yards, the encroachment shall be limited to 75% of the vertical height of the existing encroachment. The amount of existing encroachment and the proposed encroachment shall be measured along a line parallel to the lot line adjacent to the yard area being encroached upon.

6. That the proposal includes adequate landscaping, buffering and is of such architectural design that nearby properties will not be more adversely affected than they were prior to the expansion of the nonconformity.

§225-603 Substitution of Nonconforming Uses.

The Township Zoning Hearing Board may grant a special exception to substitute a nonconforming use of land, buildings or structures with another nonconforming use of land, buildings or structures if the applicant can demonstrate to the Township Zoning Hearing Board's satisfaction that the proposed nonconformity is no more detrimental to the area than the existing nonconformity; that the proposed nonconforming use would cause no new nonconformities, except for use. The Township Zoning Hearing Board may attach reasonable conditions to the grant of this special exception to insure that the new nonconforming use remains no more detrimental to the area than the existing nonconforming use was.

§225-604 Restoration of Nonconforming Buildings, Structures and Land Use.

A nonconforming building, structure or land use which is partially damaged or entirely destroyed by accident, or on purpose, may be replaced or expanded in conformance with §225**-602** and shall be used for the same use as legally existed prior to the damage or destruction; provided, that the replacement building, structure or land use shall create no new nonconformities. Such restoration must commence within six months of the time of damage or destruction and must be completed within 18 months of the damage or destruction, unless the Township Zoning Hearing Board grants a special exception to extend these time limits on the basis of such restoration not being practical or possible within the time limits herein prescribed. Any nonconforming building, structure, or land use located within the Floodplain Overlay District must also comply with the requirements of §225-304. Applications for a special exception to alter these time limitations for commencement of restoration shall be filed no later than six months after the time of damage or destruction.

§225-605 Reversion of Nonconformity.

No nonconformity shall, after having been changed to conform to the regulations of this Chapter, be permitted to revert to the original or any other nonconformity.

§225-606 Certain Existing Uses Declared Nonconforming Uses.

Existing uses now permitted only by a special exception or conditional use under this Chapter, shall be declared existing nonconforming uses, and shall may be expanded, altered or restored only in conformity with the provisions of this article, based on the conditions of Section 225-602, except that the floor area or land use area expansion limitations shall be calculated based on existing floor area or land use area as of January 1, 2017.

§225-607 Nonconforming Signs.

The provision of this article shall not apply to signs, which shall be governed by the provisions of §225-403.5401.4.I.

Article VII
Rezoning

§225-701 Purpose of Rezoning.

Rezoning can be initiated to protect the safety, capacity and efficiency of Derry Township the Township's existing infrastructure systems; to maintain fiscal responsibility; and to uphold the objectives of the Derry Township Comprehensive Plan. See also the Pennsylvania Municipalities Planning Code §609.

§225-702 Rezoning Application Forms.

Rezoning applications are completed on the official forms provided by the Zoning Officer. All Applicants submitting rezoning applications are required to prepare a series of plans, analyses and reports as enumerated in §704 to demonstrate the compatibility of a rezoning proposal.

§225-703. Review of Rezoning Applications.

A. The Zoning Officer:

1. Will perform a review of the application and packet for completeness. An incomplete or insufficient application and packet will be returned to the Applicant. A completed application and packet will be forwarded to the Township Planning Commission for review.

2. Will provide the Applicant a letter within seven (7) business days stating that the application has been submitted with all required information attached.

B. As part of the rezoning approval process, the Township Planning Commission and Board of Supervisors can consider the motivation and implications of each plan, analysis and report.

C. The Township Planning Commission:

1. Will consider any projected beneficial and/or detrimental effects on Derry Township the Township and may hold a public hearing on the application, if they deem it applicable.

2. Will submit a written recommendation either in favor or not in favor of the rezoning proposal including a specific statement as to whether or not the proposed rezoning is in accordance with the objectives of the Derry Township Comprehensive Plan.

3. Will forward Township Board of Supervisors a recommendation for the nature of action regarding rezoning.

D. The Township Board of Supervisors will hold a public hearing on the application and compose a brief summary explanation of its decision and forward the decision and explanation to the Applicant. Upon rezoning approval, the Zoning Officer will update the Zoning Map accordingly.

E. The Dauphin County Planning Commission shall review such requests and provide comments as necessary.

§225-7804. Application Criteria.

A. Application Requirements. The plans and reports that a landowner and/or developer are to submit shall include:

1. Conceptual Site Development Plan.

2. Topographic survey.

3. Site conditions report.

4. Estimated infrastructure (sanitary sewer and potable water) demands (gallons per day).
5. Off-street parking projections (number of parking spaces) available on site.
6. A summary of anticipated impacts on adjoining lots including but not limited to noise, vibration, night-time lighting, service area locations and visibility, hours of operation.
7. Depending upon the location of lot access, infrastructure service/demands and impacts identified in §804.A.4. on adjoining lots, the Township may require a landowner and/or developer to prepare other potential related studies such as:
    a. Traffic related studies
    b. Fiscal impact analysis
    c. Density comparison to base zoning
    d. Geotechnical/stormwater analysis

B. The Township will evaluate the proposed development of the proposed zoning in relationship to the potential development in the existing zoning. The Township Planning Commission and Township Board of Supervisors reserve the right to require additional information as part of the review and approval processes in order to evaluate the applicability of the rezoning.

Article VIII
Permits

§225-801 Application for Zoning Permits, Building Permits or Certificates of Use and Occupancy.

The applicant shall be responsible to submit sufficient data with an application for a zoning permit, building permit, or certificate of use and occupancy to enable the Township to review said application for full compliance with the provisions of this and other applicable ordinances. The Township reserves the right to request the applicant to submit information certified by a professional engineer or registered surveyor licensed by the State of Pennsylvania, when it is deemed necessary for an accurate review of the application. Particular attention is drawn to the need to submit data necessary to review and calculate the net developable acres of a site, as described in §225-206.L of this Chapter.

§225-802 Permits.

A. Building permit administration shall be governed by provisions of the currently adopted building code or codes of the Township of Derry; provided, however, that no building permit shall be issued until the Zoning Officer has certified that the proposed building, structure, addition, or alteration thereto or any change of use complies with all of the provisions of this Chapter, and has issued a zoning permit. The issuance of a building code permit does not indicate that a zoning permit can be issued, nor is it to be considered a license to begin work where a zoning permit is also required. The Zoning Officer shall deny a zoning permit, and any other permit authorized by this Chapter, to any applicant to whom a permit may be denied pursuant to the Neighborhood Blight Reclamation and Revitalization Act, Act 90 of 2010, 53 Pa.C.S.A. § 6101 et seq.

B. Zoning permit administration shall be governed by the provisions of this Chapter.

1. A zoning permit shall be required prior to:

a. A change in use of land or structure.

b. The placement, erection or construction of a structure, or portion thereof, that has a fair market value exceeding $500, including, but not limited to, fences, except that a permit shall be required prior to construction or development that is located within the Floodplain Overlay, regardless of its cost.

c. The alteration or improvement of any existing structure, where such improvement or portion thereof increases the amount of space which the structure encloses.

d. The alteration or development of any improved or unimproved real estate.

e. The erection or alteration of any signs specified in this Chapter.

f. Any improvement or alteration to property subject to the provisions of the Floodplain Overlay of this Chapter.

2. No zoning permit shall be required for the following:

a. The placement, erection or construction of a structure, or portion thereof, that has a fair market value less than $500, including, except that a permit shall be required prior to the placement, erection or construction of a fence or any other structure that is located within the Floodplain Overlay District, regardless of its cost.

b. Ordinary repair to existing structures, except signs.

c. Light fixtures for one and two family dwellings complying with 225-4210, Outdoor lighting design standards.

d. Sidewalks or walkways on grade.

e. Access drives.

f. Flagpoles for the display of official government flags of the United States and its political subdivisions placed on one and two family dwelling properties.

g. Sidewalk or walkway steps when not connected to a building, porch, deck or other part of a building or structure.

h. Vegetation, including trees, landscaping and vegetative buffering.

i. Landscaping materials excluding patios, decks or porches.

j. Decorative lawn ornaments and walls not exceeding 32 inches in height.

k. Children's play yards, trampolines, tree houses and swing sets placed on single-family detached, single-family semidetached, single-family attached and two-family detached dwellings and multifamily dwelling unit lots.

l. Handrails along sidewalk or walkway steps.

m. Parking spaces for single-family detached, single-family semidetached, single-family attached and two-family detached dwellings and multifamily dwelling units having less than four dwelling units per building.

n. Stormwater management facilities.

o. Traffic control devices, when located within public right-of-way or a governmental easement.

p. Utility structures not exceeding 84 inches in height, emergency call stations, and utility poles, masts, or towers except that communications towers and recreational lighting poles shall require permitting.

q. Bus, tram and/or trolley ways and stops involving surface improvements only.

r. Railroad sidings.

s. Signs exempted from permit by 225-403.5401.4.C.

t. Temporary construction buildings or trailers as permitted by 225-405.

3. Application for zoning permits shall be submitted to the Zoning Officer.

4. Such zoning permits shall be granted or denied, in whole or in part, within 30 business days of the filing date.

5. No zoning permit shall be issued except in conformity with:

    a. All applicable regulations of this Chapter.

    b. Any conditions imposed upon the site by the Township Zoning Hearing Board or the Township Board of Supervisors.

    c. Any recorded subdivision or land development plan.

6. In all instances in which the Zoning Officer expresses a reasonable doubt as to the ability of a proposed use or improvement to meet all of the above-described requirements, it will be incumbent upon the applicant to furnish adequate evidence in support of his application. If such evidence is not presented, the zoning permit will be denied.

7. Application for a zoning permit shall be made by the owner or lessee of any building or structure, or the agent of either; provided, however, that if the application is made by a person other than the owner or lessee, it shall be accompanied by a written authorization of the owner or the qualified person making an application, that the proposed work is authorized by this owner. The full names and addresses of the owner, lessee, applicant, and of the responsible officers, if the owner or lessee is a corporate body, shall be stated in the application.

8. The Zoning Officer may call upon other Township staff and/or Township-appointed consultants in the review of submitted materials for applications.

9. The Zoning Officer may revoke a zoning permit or approval issued under the provisions of this Chapter in case of any false statement or misrepresentation of fact in the application or on the plans on which the zoning permit or approval was based or for any other cause set forth in this Chapter.

10. No permit shall be issued until the fee, in an amount as established from time to time by resolution of the Township Board of Supervisors, is paid to the Township of Derry. The payment of fees under this section shall not relieve the applicant or holder of said permit from payment of other fees that may be required by this Chapter or by any other ordinances or law. Where a permit is required by this Chapter, but the work is commenced or the use is commenced or changed prior to obtaining such zoning permit, the fee set by resolution of the Township Board of Supervisors for such permit shall be doubled. The doubling of the permit fee shall be required to reflect the additional expense incurred by the Township resulting from the need to inspect the property, respond to any complaints, issue any enforcement notices and/or process the application as soon as it is received. The payment of such increased permit fee shall not relieve any person from complying with all requirements of this Chapter or any other applicable Township ordinances or from any penalties or enforcement actions authorized by this Chapter or the Pennsylvania Municipalities Planning Code.

11. Issuance of zoning permits. Upon receiving the application, the Zoning Officer shall examine the same within a reasonable time after filing. If the application or plans do not conform to the provisions of all pertinent local laws, the Zoning Officer shall reject such application in writing, stating the reasons therefor, and informing the applicant of his or her right to appeal the Zoning Officer's decision to the Township Zoning Hearing Board. If satisfied that the proposed work and/or use conforms to the provisions of this Chapter and all laws and ordinances applicable thereto, and that the certificate of use and occupancy as required herein has been applied for, the Zoning Officer shall grant or deny a permit application, in whole or in part, within 30 business days of the filing date.

12. Reconsideration of application. An applicant whose request for a permit has been denied by the Zoning Officer may make a later application for a zoning permit, provided all deficiencies which were the basis for the prior denial of the permit have been eliminated. The Zoning Officer shall not be required to conduct a new review of the application if this condition is not met.

13. Expiration of permit. The zoning permit shall expire after one year from the date of issuance; provided, however, that the same may be extended every six months for a period not to exceed an additional two years, upon written request by the applicant which demonstrates good cause to the Zoning Officer. When a zoning permit is issued in conjunction with a building permit, the zoning permit shall remain valid so long as the building permit is valid. A permit may be valid for no more than five years from its issue date.

14. Compliance with this Chapter. The zoning permit shall be a license to proceed with the work and should not be construed as authority to violate, cancel, or set aside any of the provisions of this Chapter, except as stipulated by this Chapter. The issuance of a zoning permit does not indicate that a building permit can be issued nor is it to be considered a license to begin work where a building permit is also required.

15. Compliance with zoning permit and plot plan. All improvements or uses shall conform to the approved application and plans for which the zoning permit has been issued as well as the approved plot plan.

16. Display of zoning permit. All approved zoning permits shall be prominently displayed on the subject property during construction, renovation, reconstruction, repair, remodeling, or the conduct of other site improvements. Such permit displays shall occur within five days of permit issuance, or prior to the commencement of actual work on the site, whichever occurs first. Such permit display shall be continuous until the site receives its certificate of use and occupancy.

C. Application for all zoning permits.

1. Applications shall contain a general description of the proposed work, development, use or occupancy of all parts of the structure or land and shall be accompanied by plans in duplicate drawn to scale and showing the following, where applicable:

   a. Actual dimensions and shape of lot to be developed.

   b. Exact location and dimensions of any structures to be erected, constructed, and/or altered.

   c. Existing and proposed uses, including the number of occupied units, businesses, etc., all structures are designed to accommodate.

   d. Off-street parking and loading spaces.

   e. Utility systems affected and proposed, including the locations of any primary and alternate on-lot sewage disposal systems and required isolation distances imposed thereupon and any sewer permitting required.

   f. Alteration or development of any improved or unimproved real estate.

   g. The size of structures and the number of employees anticipated.

   h. Two copies of approved highway occupancy or driveway permits.

i. Information related to needed conservation plans, nutrient management plans, and erosion and sediment pollution control plans.

j. Information related to approvals from the Township Board of Supervisors and the Township Zoning Hearing Board.

k. Proof of approval from the Pennsylvania Department of Labor and Industry.

2. Any other lawful information that may be required by the Zoning Officer to determine compliance with this Chapter.

3. If the proposed development, excavation, or construction is located entirely or partially within the Floodplain Overlay, the preceding information is to be supplemented by additional information required by §225-401.2.2.

D. Application for zoning permits for all nonresidential uses shall also contain, where applicable:

1. A location plan showing the lot(s) to be developed, zoning district boundaries, adjoining lots, significant natural features, and streets for a distance of 200 feet from all lot boundaries.

2. A plot plan of the lot showing the location of all existing and proposed buildings, driveways, parking lots showing access drives, circulation patterns, curb cut accesses, parking stalls access from streets, screening fences and walls, waste disposal fields or other methods of sewage disposal, other construction features on the lot, and the location of all topographical features.

3. A description of the operations proposed in sufficient detail to indicate the effects of those operations in producing traffic congestion, noise, glare, air pollution, water pollution, vibration, fire hazards, safety hazards, or the emission of any potentially harmful or noxious matter or radiation.

4. Engineering plans for the handling of traffic, noise, glare, air pollution, water pollution, vibration, fire hazards, or safety hazards, smoke, or emission of any potentially harmful or noxious matter or radiation.

5. Designation of the manner by which sanitary sewage and stormwater shall be disposed and water supply obtained.

6. The proposed number of shifts to be worked and the maximum number of employees on each shift.

7. Where use by more than one firm is anticipated, a list of firms which are likely to be located in the center, their floor area, and estimated number of employees.

E. Certificate of use and occupancy.

1. It shall be unlawful to use and/or occupy any structure, building, sign, and/or land or portion thereof for which a zoning permit is required herein until a certificate of use and occupancy for such structure, building, sign, and/or land or portion thereof has been issued by the Zoning Officer. The application for issuance of a certificate of use and occupancy shall be made at the same time an application for a zoning permit is filed with the Zoning Officer.

2. The application for a certificate of use and occupancy shall be in such form as the Zoning Officer may prescribe and may be made on the same application as required for a zoning permit.

3. The application shall contain the intended use and/or occupancy of any structure, building, sign, and/or land or portion thereof for which a zoning permit is required herein.

4. The Zoning Officer or assign shall inspect any structure, building, or sign within 10 days upon notification that the proposed work that was listed under the zoning permit has been completed, and if satisfied that the work is in conformity and compliance with the work listed in the issued zoning permit and all other pertinent laws, shall issue a certificate of use and occupancy for the intended use listed in the original application.

5. The certificate of use and occupancy or a copy thereof shall be kept available for official inspection at all times.

6. Upon request of a holder of a zoning permit, the Zoning Officer may issue a temporary certificate of use and occupancy for a structure, building, sign, and/or land, or portion thereof, before all work covered by the zoning permit is completed, provided such portion or portions may be used and/or occupied safely prior to full completion of the work without endangering life or public welfare. Such temporary certificates shall be for the period of time to be determined by the Zoning Officer, however, in no case for a period exceeding six months.

7. A certificate of use and occupancy shall not be issued for structures and buildings located in subdivisions or land developments requiring improvement guarantees until the structure or building has access to either a roadway which has been dedicated to and accepted by the Township, or which abuts upon a street which has been paved with a base wearing course.

§225-803 Conditions of Permit.

A. No zoning permit or building permit shall be issued until the fees prescribed by the Township Board of Supervisors have been paid to the Township. The payment of fees described in this section shall not relieve the applicant or holder of said permit from payment or reimbursement to the Township of other fees that may be required by this Chapter or any other regulation, including any fees for special consulting services required in the issuance of the permit as may be required by §225-802.—B(108).

B. The permit, or permits where both a zoning permit and a building permit are required, shall be a license to proceed with the work and should not be construed as authority to violate, cancel, or set aside any of the provisions of this Chapter.

C. All work or use shall conform to the approved application and plans for which the permit has been issued, as well as the approved plot plan.

§225-804 Records.

It shall be the duty of the Zoning Officer to keep records of all applications received, all permits and certificates of use and occupancy issued, reports of inspection and notices and orders issued. He shall file and safely keep copies of all plans permitted, and the same shall form a part of the records of his office and shall be available for the use of the Township Board of Supervisors and other officials of the Township.

§225-805 Certificate of Use and Occupancy.

A. When certificate of use and occupancy is required. It shall be unlawful to use or occupy any structure, building, or land or portion thereof hereinafter established until a certificate of use and occupancy for such structure, building, or land, or portion thereof, has been issued by the Township. The application for issuance of a certificate of use and occupancy shall be deemed to have been made at the same time an application for a zoning permit and/or building permit is filed with the Township. If a zoning permit and/or building permit is not required, a certificate of use and occupancy will still be required.

B. The application for a certificate of use and occupancy shall be in such form as the Zoning Officer may prescribe or may be made on the same application as is required for a permit.

C. The application shall contain a description of the intended use and occupancy of any structure, building or land or portion thereof for which a permit or certificate of use and occupancy is required herein.

D. The Zoning Officer or Building Code Official shall inspect any structure, building or use within five business days after notification that the proposed work that was listed under the permit has been completed, and, if satisfied that the work is in conformity and compliance with the work listed in the issued permit and all other pertinent laws, a certificate of use and occupancy shall be issued for the intended use listed in the original application.

E. The certificate of use and occupancy or a true copy thereof shall be kept available for inspection by the Zoning Officer at all times.

Article IX
Amendments

§225-901 Enactment of Zoning Ordinance Amendments[cjb29].

The Township Board of Supervisors may, from time to time, amend, supplement or repeal any of the regulations and provisions of this Chapter. The enactment of a zoning amendment shall be in accordance with PA Municipalities Planning Code Section 609. Enactment of Zoning Ordinance Amendments.

§225-902 Landowner Curative Amendments.

A landowner who desires to challenge on substantive grounds the validity of this Chapter or the Zoning Map, or any provision thereof, which prohibits or restricts the use or development of land in which he has an interest, shall submit a curative amendment in the form of a petition described in §225**-903C**, including fees, to the Township with a written request that his challenge and proposed amendment be heard and decided as provided in § 916.1 of the Pennsylvania Municipalities Planning Code, 53 P.S. § 10916.1. The Township Board of Supervisors shall commence the associated procedures in accordance with PA Municipalities Planning Code Section 609.1. Procedure for Landowner Curative Amendments.

§225-903 Township Curative Amendments.

If the Township Board of Supervisors determines that this Chapter, or any portion hereof, is substantially invalid, it shall take actions in accordance with Section 609.2. Procedure for Municipal Curative Amendments.

§225-904 Enactment, Publication, Advertisement and Availability of Ordinances.

Proposed zoning ordinances and amendments shall be published, advertised and available for review in accordance with PA Municipalities Planning Code Section 610. Publication, Advertisement and Availability of Ordinances.

Article X
Administration and Enforcement

§225-1001 Appointment and Powers of Zoning Officer.

A. For the administration of this Chapter, a Zoning Officer, who shall not hold any elective office in the Township of Derry, shall be appointed.

B. The Zoning Officer shall meet the qualifications established by the Township and shall be able to demonstrate to the satisfaction of the Township a working knowledge of municipal zoning.

C. The Zoning Officer shall administer this Chapter in accordance with its literal terms, and shall not have the power to permit any construction or any use or change of use which does not conform to this Chapter.

D. The Zoning Officer shall also be the Floodplain Administrator and shall administer and enforce those portions of this Chapter related to **§225-403401.2.2**.

E. The Zoning Officer shall be authorized to institute civil enforcement proceedings as a means of enforcement.

§225-1002 Enforcement.

It shall be the duty of the Zoning Officer to enforce the provisions of this Chapter and such power and authority as is necessary for enforcement is hereby conferred upon the Zoning Officer. The Zoning Officer shall examine all applications for zoning permits, building permits, and land use, and upon determination that all proposed activities are in accordance with the requirements of this Chapter and all other relevant ordinances, shall authorize issuance of zoning permits, building permits, and/or certificates of use and occupancy, as the situation may warrant.

§225-1003 Conflicting Regulations and Interpretation of Provisions.

A. In the interpretation and application, the provisions of this Chapter shall be held to be minimum requirements, adopted for the protection of the public health, safety, morals or general welfare. Wherever the requirements of this Chapter are at variance with the requirements of any other lawfully adopted rules, regulations or ordinances, including other portions of this Chapter, the most restrictive or that imposing the higher standards shall govern.

B. In interpreting the language of this Chapter to determine the extent of the restriction upon the use of the property, the language shall be interpreted, where doubt exists as to the intended meaning of the language adopted by the Township Board of Supervisors, in favor of the property owner and against any implied extension of the restriction.

§225-1004 Enforcement Notice.

A. If it appears to the Township that a violation of this Chapter has occurred, the Township shall initiate enforcement proceedings by sending an enforcement notice as provided in this section.

B. The enforcement notice shall be sent to the owner of record of the parcel on which the violation has occurred, to any person who has filed a written request to receive enforcement notices regarding that parcel and to any other person requested in writing by the owner of record.

C. An enforcement notice shall be in writing and shall state at least the following:

1. The name of the owner of record and any other person against whom the Township intends to take action.

2. The location of the property in violation.

3. The specific violation, with a description of the requirements which have not been met, citing in each instance the applicable provisions of this Chapter, and an outline of remedial action which, if taken, will effect compliance with the provisions of this Chapter.

4. The date before which the steps for compliance must be commenced and the date before which the steps must be completed.

5. That the recipient of the notice has the right to appeal to the Township Zoning Hearing Board.

6. That failure to comply with the notice within the time specified, unless extended by appeal to the Township Zoning Hearing Board, constitutes a violation, with possible sanctions clearly described.

D. In any appeal of an enforcement notice to the Zoning Hearing Board of the Township shall have the responsibility of presenting its evidence first.

E. Any filing fees paid by a party to appeal an enforcement notice to the Zoning Hearing Board shall be returned to the appealing party by the Township if the Zoning Hearing Board, or any court in a subsequent appeal, rules in the appealing party's favor.

§225-1005 Causes of Action.

In case any building, structure, landscaping or land is, or is proposed to be erected, constructed, reconstructed, altered, converted, maintained or used in violation of this Chapter, the Township Board of Supervisors or, with the approval of the Township Board of Supervisors, an officer of the Township, or any aggrieved owner or tenant of real property who shows that his property or person will be substantially affected by the alleged violation, in addition to other remedies, may institute any appropriate action or proceeding to prevent, restrain, correct or abate such building, structure, landscaping or land, or to prevent, in or about such premises, any act, conduct, business or use constituting a violation. When any such action is instituted by a landowner or tenant, notice of that action shall be served upon the Township at least 30 days prior to the time the action is begun by serving a copy of the complaint on the Township Board of Supervisors. No such action may be maintained until such notice has been given.

§225-1006 Violations and Penalties.

A. Any person, partnership or corporation who or which has violated or permitted the violation of the provisions of this Chapter shall, upon being found liable therefor in a civil enforcement proceeding commenced by the Township, pay a judgment of not more than $500 plus all court costs, including reasonable attorney fees incurred by the Township as a result thereof. No judgment shall commence or be imposed, levied or payable until the date of the determination of a violation by the District Justice. If the defendant neither pays nor timely appeals the judgment, the Township may enforce the judgment pursuant to the applicable rules of civil procedure. Each day that a violation continues shall constitute a separate violation, unless the District Justice determining that there has been a violation further determines that there was a good faith basis for the person, partnership or corporation violating this Chapter to have believed that there was no such violation, in which event there shall be deemed to have been only one such violation until the fifth day following the date of the determination of a violation by the District Justice and thereafter each day that a violation continues shall constitute a separate violation.

B. The Dauphin County Court of Common Pleas, upon petition, may grant an order of stay, upon cause shown, tolling the per diem fine pending a final adjudication of the violation and judgment.

C. Nothing contained in this Chapter shall be construed or interpreted to grant to any person or entity other than the Township the right to commence any action for enforcement pursuant to this Chapter.

D. District Justices shall have initial jurisdiction over proceedings brought under this Chapter.

§225-1007 Township Zoning Hearing Board.

§225-1007.1 Appeals and Applications to Township Zoning Hearing Board.

Appeals and applications to the Township Zoning Hearing Board from the terms of this Chapter shall be filed with the Zoning Officer and shall contain:

A. The name and address of the applicant.

B. The name and address of the owner of the real estate involved in the appeal.

C. A brief description and location of the real estate involved in the appeal.

D. A statement of the present zoning classification of the involved real estate and a description of the improvements thereon and the present use thereof.

E. Reference to the section of this Chapter under which the appeal or application is filed; or, reference to the section of this Chapter governing the situation in which the alleged erroneous ruling is being appealed and reasons for the appeal.

F. An accurate description of the present and/or proposed use intended to be made, indicating the size and use of such proposed use. In addition, there shall be attached a plot plan of the involved real estate as required to accompany applications for permits.

G. An application fee, in an amount as established from time to time by resolution of the Township Board of Supervisors, which is payable to the Township of Derry.

§225-1007.2 Membership; Terms; Vacancies.

The membership of the Township Zoning Hearing Board shall consist of five residents of Derry Township appointed by the Township Board of Supervisors by resolution. Their terms of office shall be five years and shall be so fixed that the term of office of no more than one member shall expire each year. The Township Zoning Hearing Board shall promptly notify the Township Board of Supervisors of any vacancies which occur. Appointments to fill vacancies shall be only for the unexpired portion of the term. Members of the Township Zoning Hearing Board shall hold no other office in the Township.

§225-1007.3 Removal of Members.

Any Township Zoning Hearing Board member may be removed for malfeasance, misfeasance or nonfeasance in office or for other just cause by majority vote of the Township Board of Supervisors, taken after the member has received 15 days' advance notice of the intent to take such a vote. A hearing shall be held in connection with the vote if the member shall request it in writing.

§225-1007.4 Organization.

A. The Township Zoning Hearing Board shall elect from its own membership its officers, who shall serve annual terms as such and may succeed themselves. For the conduct of any hearing and the taking of any action, a quorum shall be not less than a majority of all the members of the Township Zoning Hearing Board, but the Township Zoning Hearing Board may appoint a hearing officer from its own membership to conduct any hearing on its behalf and the parties may waive further action by the Township Zoning Hearing Board as provided in §225**-1007.6** of this article.

B. The Township Zoning Hearing Board may make, alter and rescind rules and forms for its procedure, consistent with the ordinances of the Township and laws of the Commonwealth. The Township Zoning Hearing Board shall keep full public records of its business, which records shall be the property of the Township, and shall submit a report of its activities to the Township Board of Supervisors as requested by the Township Board of Supervisors.

§225-1007.5 Expenditures for Services.

Within the limits of funds appropriated by the Township Board of Supervisors, the Township Zoning Hearing Board may employ or contract for secretaries, clerks, legal counsel, consultants and other technical and clerical services. Members of the Township Zoning Hearing Board may receive compensation for the performance of their duties, as may be fixed by resolution of the Township Board of Supervisors, but in no case shall it exceed the rate of compensation authorized to be paid to the members of the Township Board of Supervisors.

§225-1007.6 Conduct of Hearings.

The Township Zoning Hearing Board shall conduct hearings and make decisions in accordance with PA Municipalities Planning Code Section 908. Hearings.

§225-1007.7 Jurisdiction.

The Township Zoning Hearing Board shall have exclusive jurisdiction to hear and render final adjudications in the following matters:

A. Substantive challenges to the validity of any land use ordinance, except those brought before the Township Board of Supervisors pursuant to §§ 609.1 and 916.1(a)(2) of the Pennsylvania Municipalities Planning Code, 53 P.S. §§ 10609.1 and 10916.1(a)(2).

B. Challenges to the validity of a land use ordinance raising procedural questions or alleged defects in the process of enactment or adoption which challenges shall be raised by an appeal taken within 30 days after the effective date of said ordinance.

C. Appeals from the determination of the Zoning Officer including, but not limited to, the granting or denial of any permit, or failure to act on the application therefor, the issuance of any cease and desist order or the registration or refusal to register any nonconforming use, structure or lot.

D. Appeals from a determination by the Township Engineer or the Zoning Officer with reference to the administration of any floodplain or flood hazard ordinance or such provisions within a land use ordinance.

E. Applications for variances from the provisions of this Chapter.

F. Applications for special exceptions from the provisions of this Chapter.

G. Appeals from the determination of any officer or agency charged with the administration of any transfer of development rights or performance density provisions of this Chapter.

H. Appeals from the Zoning Officer's determination under § 916.2 of the Pennsylvania Municipalities Planning Code, 53 P.S. § 10916.2.

I. Appeals from the determination of the Zoning Officer or the Township Engineer in the administration of any land use ordinance or provision thereof with reference to sedimentation and erosion control and stormwater management insofar as the same relate to development not involving development controlled by Chapter **174**, Stormwater Management; Chapter **185**, Subdivision and Land Development; or planned residential development.

§225-1007.8 Applicability of Judicial Remedies.

Nothing contained in this article shall be construed to deny the appellant the right to proceed directly to court where appropriate, pursuant to the Pennsylvania Rule of Civil Procedure No. 1091, relating to action in mandamus.

§225-1007.9 Variances.

A. The Township Zoning Hearing Board shall hear requests for variances where it is alleged that the provisions of this Chapter inflict unnecessary hardship upon the applicant. The Township Zoning Hearing Board may by rule prescribe the form of application and may require preliminary application to the Zoning Officer. The Township Zoning Hearing Board may grant a variance; provided, that all of the following findings are made where relevant in a given case:

   1. That there are unique physical circumstances or conditions, including irregularity, narrowness or shallowness of lot size or shape, or exceptional topographical or other physical conditions peculiar to the particular property and that the unnecessary hardship is due to such conditions and not the circumstances or conditions generally created by the provisions of this Chapter in the neighborhood or district in which the property is located.

   2. That, because of such physical circumstances or conditions, there is no possibility that the property can be developed in strict conformity with the provisions of this Chapter and that the authorization of a variance is therefore necessary to enable the reasonable use of the property.

   3. That such unnecessary hardship has not been created by the appellant.

   4. That the variance, if authorized, will not alter the essential character of the neighborhood or district in which the property is located, nor substantially or permanently impair the appropriate use or development of adjacent property, nor be detrimental to the public welfare.

   5. That the variance, if authorized, will represent the minimum variance that will afford relief and will represent the least modification possible of the regulation in issue.

B. In granting any variance, the Township Zoning Hearing Board may attach such reasonable conditions and safeguards as it may deem necessary to implement the purposes of the Pennsylvania Municipalities Planning Code, 53 P.S. § 10101 et seq., and this Chapter.

C. Unless specifically authorized by the Township Zoning Hearing Board, the grant of a variance shall expire if a zoning permit, building permit, or certificate of use and occupancy is not obtained within one year from the date of grant of variance, unless the Township Zoning Hearing Board, in its decision, permits a greater period of time.

§225-1007.10 Special Exceptions.

A. Where the Township Board of Supervisors in this Chapter has stated special exceptions to be granted or denied by the Township Zoning Hearing Board pursuant to express standards and criteria, the Township Zoning Hearing Board shall hear and decide requests for such special exceptions in accordance with such standards and criteria. In granting a special exception, the Township Zoning Hearing Board may attach such reasonable conditions and safeguards, in addition to those expressed in the Pennsylvania Municipalities Planning Code, 53 P.S. § 10101 et seq., as it may deem necessary to implement the purposes of this Chapter.

B. Unless specifically authorized by the Township Zoning Hearing Board, the grant of a special exception shall expire if a zoning permit, building permit, or certificate of use and occupancy is not obtained within one year from the date of the grant of the special exception however, if the grant of a special exception requires the processing of a subdivision or land development plan, then the grant of the special exception shall expire if a zoning permit, building permit, or certificate of use and occupancy is not obtained within two years from the date of the grant of the special exception , unless the Township Zoning Hearing Board, in its decision, grants a special exception to permit a greater period of time.

§225-1007.11 Parties Appellant before Board.

Appeals under §225**-1007.7. A**, **B**, **C**, **D**, **G**, **H** and **I** may be filed with the Township Zoning Hearing Board in writing by the landowner affected, and any officer or agency of the Township or any person aggrieved. Requests for variances pursuant to §225**-1007.9** and special exceptions pursuant to §225**-1007.10** may be filed with the Township Zoning Hearing Board by any landowner or any tenant with the permission of such landowner.

§225-1007.12 Time Limitations.

A. No person shall be allowed to file any proceeding with the Township Zoning Hearing Board later than 30 days after an application for development, preliminary or final, has been approved by an appropriate Township officer, agency or body if such proceeding is designed to secure reversal or to limit the approval in any manner unless such person alleges and proves that he had no notice, knowledge or reason to believe that such approval had been given. If such person has succeeded to his interest after such approval, he shall be bound by the knowledge of his predecessor in interest. The failure of anyone other than the landowner to appeal from an adverse decision on a tentative planned residential development plan or from an adverse decision by a Zoning Officer on a challenge to the validity of an ordinance or map pursuant to § 916.2 of the Pennsylvania Municipalities Planning Code, 53 P.S. § 10916.2, shall preclude an appeal from a final approval except in the case where the final submission substantially deviates from the approved tentative approval.

B. All appeals from determinations adverse to the landowners shall be filed by the landowner within 30 days after notice of the determination is issued.

§225-1007.13 Stay of Proceedings.

See PA Municipalities Planning Code Section 915.1.

§225-1008 Township Planning Commission creation, administration, powers, duties, procedures, and other functions.

A. The Township Board of Supervisors has by Chapter 11, Boards, Committees, and Commissions of the Code of the Township of Derry, previously created the Derry Township Planning Commission pursuant to the Pennsylvania Municipalities Planning Code, as amended.

B. The Township Planning Commission shall be bound by the administration, conduct, powers, duties, procedures, and other functions of their role as determined by Township Board of Supervisors in the manner prescribed by the Pennsylvania Municipalities Planning Code, as amended.

§225-1009 Establishment of Downtown Core Design Board (DCDB).

A. Pursuant to Articles VI and VII of the MPC, the Downtown Core Design Board is hereby established to support the requirements and regulations of the Downtown Core overlay district that are discussed in §225-401.1.L. and in Chapter 99, Downtown Core Design Ordinance of the Code of the Township of Derry. Section 603 of the MPC, in part, allows a municipality to create zoning ordinances that permit, prohibit, regulate, restrict and determine the following:

1. Size, height, bulk, location, erection, construction, repair, maintenance, alteration, razing, removal and use of structures.

2. Areas and dimensions of land and bodies of water to be occupied by uses and structures, as well as areas, courts, yards, and other open spaces and distances to be left unoccupied by uses and structures.

3. Protection and preservation of natural and historic resources and prime agricultural land and activities.

4. Provide provisions for the administration and enforcement of such ordinances.

5. Provisions to encourage innovation and to promote flexibility, economy and ingenuity in development, including, but not limited to subdivisions and land developments.

6. Provisions authorizing increases in the permissible density of population or intensity of a particular use based upon expressed standards and criteria set forth in the zoning ordinance

7. Provisions to promote and preserve environmentally sensitive areas, and areas of historic significance.

B. Section 605.(2) of the MPC, allows for the regulation, restriction or prohibition of uses and structures at, along or near major thoroughfares, their intersections, transportation arteries and rail or transit terminals, public buildings and public grounds and other places having a special character or use affecting and affected by their surroundings;

C. Section 605.(3) of the MPC allows regulations for the purpose of encouraging innovation and the promotion of flexibility, economy and ingenuity in development, including, but not limited to subdivisions and land developments, and for the purpose of authorizing increases in the permissible density of population or intensity of a particular use based upon expressed standards and criteria set forth within the zoning ordinance;

D. Section701 of the MPC, promotes regulations that support the objectives of Article VI of the MPC by providing for the uniform treatment of dwelling type, bulk, density, intensity and open space within a zoning district, as opposed to a lot by lot treatment resulting in a development pattern that would distort the objectives of that Article VI of the MPC; and to encourage innovations in renewal and development of residential and nonresidential properties and facilities so that the growing demand for housing and other development may be met by greater variety in type, design and layout of dwellings and other buildings and structures and by the conservation and more efficient use of open space ancillary to said dwellings and uses; so that greater opportunities for better housing and recreation may extend to all citizens and residents of the Township; and in order to encourage a more efficient use of land and of

public services and to reflect and support changes in the technology of land development so that economies secured may inure to the benefit of those who need homes and for other uses; and, in aid of these purposes, to provide a procedure which can relate the type, design and layout of residential and nonresidential development to the particular site and the particular demand for housing existing at the time of development in a manner consistent with the preservation of the property values within existing residential and nonresidential areas, and to insure that the increased flexibility of regulations over land development authorized herein is carried out under such administrative standards and procedures as shall encourage the disposition of proposals for land development without undue delay, the Downtown Core overlay standards and the DCDB are hereby entitled, created, and supported by this Section.

E. The DCDB shall consist of those members and operate under the standards as established in Chapter 99, Downtown Core Design Ordinance.

Article XI
Definitions

§225-1101 Word Usage.

Words and phrases in this Chapter shall be used in their ordinary context unless such word or phrase is specifically defined in this article.

§225-1102 Language Interpretation.

In this Chapter, when not inconsistent with the context:

A. Words in the present tense imply also the future tense.

B. The singular includes the plural.

C. The male gender includes the female gender.

E. The term "shall" or "must" is always mandatory.

F. The words "used" and "occupied" shall be construed to include the words "or intended, arranged or designed to be used or to be occupied, or offered for occupancy."

G. The term "such as" shall be considered as introducing a typical or illustrative designation of items, and shall not be interpreted as constituting a complete list.

H. The words "person" and "owner" shall be deemed to include a corporation, unincorporated association and a partnership or other legal entity, as well as an individual.

I. The words "building" and "structure" shall be construed as if followed by the phase "or part thereof."

J. If a term is undefined by this Chapter, but is defined in Chapter 185 Subdivision and Land Development, then the definition of the term in Chapter 185 shall also apply to the term used in this Chapter.

K. If a term is defined in this Chapter, and is defined differently in other Chapters of the Township Code, the definition of the term in this Chapter shall be used as defined in this Chapter.

§225-1103 **Definitions.**

The following words and phrases shall have the particular meaning assigned by this section where used in this Chapter:

ACCESS DRIVE - A driveway leading from an area designated for parking to a street.

ACCESSORY DWELLING UNIT - A dwelling unit which has been authorized to be established by the Township Zoning Hearing Board pursuant to this Chapter, which is occupied by a person or persons related by blood or marriage to the resident/owner of the dwelling unit to which the accessory dwelling unit is subordinate, or which is occupied by a person or persons employed to provide health care, domestic housekeeping or horticultural services to the resident/owner of, and on the site of, the resident/owner's dwelling unit.

ACCESSORY STRUCTURE – A detached subordinate structure the use of which is clearly incidental to the principal structure and/or principal use of the land.

ACCESSORY USE - A use customarily incidental and subordinate to the principal use and located on the same lot with such principal use. An accessory use may be a use of land, or a building, or structure.

ADMINISTRATION OFFICES OF COUNTY, STATE OR FEDERAL GOVERNMENT - A building or facility operated by a governmental agency where administrative activities are conducted or social or educational services are provided to the general public. Such uses shall include, but are not limited to, offices of Pennsylvania State agencies, offices of Dauphin County agencies, the United States government but excluding a school or recreational facility as defined by this Ordinance.

ADMINISTRATIVE REVIEW – The review process for a newly proposed, altered, or co-located communications antenna, communications ancillary equipment, and/or communications tower, to determine compliance with all applicable requirements of this chapterChapter, and in accordance with the rulings of the Federal Communications Commission regarding the appropriate municipal permitting and review timelines.

AGRICULTURAL USES - The use of land for agricultural purposes, including farming, dairying, pasturage, agriculture, horticulture, floriculture, viticulture, silviculture, aquaculture, beekeeping, animal and poultry husbandry, and the necessary accessory uses for packing, treating or storing the site production; provided, however, that the operation of any such accessory uses shall be secondary to that of the principal agricultural activities.

AIRPORT HAZARD - Any structure or object, natural or man-made, or use of land which obstructs the air space required for flight of aircraft in landing or taking off at an airport or is otherwise hazardous to the landing or taking-off of aircraft.

AIRPORT HAZARD AREA - An area of land or water upon which an airport hazard might be established if not prevented as provided for in Airport Zoning Act, 74 Pa.C.S.A. § 5911 et seq.

ALLEY - See STREET.

ALTER (re: signs) - Any change to a sign, other than a change in message, or color, but including changes to supporting structure, size, height, illumination, or location.

AMUSEMENT ARCADE - A building or part of a building in which five or more pinball machines, video games or other similar player-operated amusement A principal use of a building in which player-operated amusement devices, such aspinball machines, video games, coin-operated games, or other similar devices are used by the general public.

AMUSEMENT RIDE -A device, including structural supports and foundations, that carries or conveys passengers along, around, or over a fixed or restricted route or course or within a defined area, for the purpose of giving passengers amusement, pleasure, thrills or excitement.

AMUSEMENT, THEME, ENTERTAINMENT, OR WATER PARK - An area used principally as a permanent location of a commercially operated enterprise that offers entertainment, attractions, refreshments and amusement rides for the purpose of giving its guests amusement, pleasure, thrills or excitement.

ARCHERY & SHOOTING RANGE, INDOOR - A totally enclosed building that is equipped for the practice of shooting, including archery, where no activity associated with shooting is conducted outside the building.

ARCHERY & SHOOTING RANGE, OUTDOOR- An establishment conducted, in whole or in part, outside of a building where said establishment is equipped for the practice of shooting, including archery.

ASSEMBLING - A facility where manufactured parts delivered to the premise are assembled into a finished product, and then shipped off the premise for distribution.

AUCTION HOUSE - A building, area, or areas within a building used for the public sale of goods, wares, merchandise, or equipment to the highest bidder, where such activities occur more than twelve (12) times a year.

AUTOMOBILE & TRUCK LEASING/RENTAL - A business establishment specializing in the rental and/or leasing of automobiles and trucks.

AUTOMOTIVE CAR WASH FACILITY - A use of a structure, or portion thereof, containing facilities for washing, cleaning, and/or polishing vehicles by hand or by using automated or semi-automated methods for washing, cleaning, and/or polishing the interior or exterior of vehicles.

AUTOMOTIVE LUBRICATION FACILITY - A use of a structure, or portion thereof, in which the primary business is vehicle lubrication services, but may include Pennsylvania state safety and emissions (diagnostics) inspections; replacement of fluids, filters, bulbs, and wipers; minor glass repair; and tire maintenance and rotation.

AWNING – An element completely affixed to a building, whether for the purposes of improving aesthetic appeal, or to provide shade or shelter. Unlike canopies, awnings provide no element of support extending away from the building to the ground surface. In the event that awnings will extend over a pedestrian sidewalk or walkway, a minimum clearance of eight (8) feet must be maintained above the ground surface.

BAKERY, PRODUCTION – A business establishment specializing in the production of baked goods through preparing, cooking, and baking, intended for off-premise distribution or sale.

BAKERY, RETAIL – A business establishment specializing in the production of baked goods through preparing, cooking, and baking, to be sold primarily at the establishment and secondarily at local establishments that sell food for consumption off-site such as to grocery stores.

BASE FLOOD - A flood which has a one-percent chance of being equaled or exceeded in any given year (also called the "one-hundred-year flood").

BASE FLOOD ELEVATION (BFE) - The elevation shown on the Flood Insurance Rate Map (FIRM) for Zones AE, AH, and A1-30 that indicates the water surface elevation resulting from a flood that has a one-percent or greater chance of being equaled or exceeded in any given year.

BASE ZONING DISTRICT - A finite area of the Township, as designated by its boundaries on the Zoning Map, throughout which specific and uniform regulations govern the use of land and/or the location, size and use of buildings and structures. The regulations of a base zoning district may be supplemented or altered by regulations imposed in an overlay zoning district.

BASEMENT - Any area of the building having its floor below ground level on all sides.

BED & BREAKFAST HOME - An owner-occupied single-family detached dwelling in which a minimum of four, and a maximum of 10 rooms, all without cooking facilities, are rented to guests on a daily basis in which breakfast may be served to the guests by the proprietor of the facility.

BOARD OF SUPERVISORS - The Board of Supervisors of Township of Derry.

BOARDING HOME - A building or portion thereof used for the providing of rooms for lodging and preparation of meals for not more than 10 individuals in which individual boarding rooms do not have cooking facilities but a common cooking and eating area is provided for all boarders.

BOTANICAL GARDEN - A facility intended for the observation and/or scientific study of the cultivation of trees, flowers, fruits, vegetables, or ornamental plants, including arboretums.

BREWERY - A facility that brews ales, beers, and/or similar beverages primarily for sale off-site.

BUILDING - A combination of materials to form a permanent structure usually having walls and a roof. Included shall be all manufactured homes and/or mobile homes to be used for human habitation which are placed on a site for more than 180 consecutive days.

BUILDING ACCENT LIGHTING - Architectural lighting that is meant to highlight features of a building or meant to provide interest. This type of lighting is specifically not intended to illuminate sidewalks, parking areas or signage, and therefore is not subject to the design elements of that type of lighting.

BUILDING FRONT - The length of that portion of a building parallel to and adjacent to the street right-of-way.

BUSINESS OR PROFESSIONAL OFFICE - A use, other than a health practitioners office, in which the affairs of a business, profession, or service are conducted including administration, record keeping, consulting, clerical work and similar functions, but not including manufacturing, fabrication, production, processing, assembling, cleaning, testing, repair or storage of goods or products, or the sale of goods or products which are physically located on the premises.

BY RIGHT - A use permitted by this Chapter without any special consideration having to be given by the Township Zoning Hearing Board or the Township Board of Supervisors.

CAMPGROUND - A lot on which two or more campsites are located which are intended and maintained for occupation by transients in cottages, recreational vehicles, or tents.

CAMPSITE - An area within a campground occupied or intended to be occupied by a cottage, recreational vehicle or tent.

CAMPUS - The grounds and buildings of a university, college, school, healthcare, corporate, municipal or recreational facility

CANOPY - A roof-like structure which can be an accessory structure to the principal use on the lot or can be partially-attached to the principal structure. When over pedestrian sidewalks and walkways, canopies must maintain a minimum eight (8) foot clearance above the ground surface.

CASINO & GAMBLING FACILITY - A gaming business establishment licensed as such by the Commonwealth of Pennsylvania. This definition shall specifically exclude sale of Pennsylvania Lottery tickets, Bingo conducted pursuant to the Bingo Law, and Gambling activities conducted pursuant to the Local Option Small Games of Chance Act (including tavern games).

CEMETERY - A place used for the permanent interment of deceased humans or animals, or the cremated remains thereof. It may be either a burial park for earth interments, a mausoleum for vault or crypt interments, a columbarium for cinerary interments or a combination of one or more thereof.

CIGAR, ELECTRONIC CIGARETTES and/or HOOKAH LOUNGE - A business establishment specializing in selling patrons flavored tobacco, tobacco-like or tobacco-inspired products to be consumed on the premise, and which may sell food and non-alcoholic beverages as a secondary function.

CIVIC EVENT – An event held within Derry Township that is either sponsored by the Township or by an authority created by the Township or under contract to the Township, or that otherwise supports the Township or its citizens.

CO-LOCATION – The placement or installation of one or more wireless communications antennas on a previously-approved communications tower, building–mounted antenna, utility-mounted communications antenna, or any other structure that already supports at least one existing communications antenna.
CO-LOCATE - The placement or installation of one or more wireless communications antennas on a previously-approved communications tower, building-mounted antenna, or any other structure that already supports at least one existing communications antenna.

COMMON DRIVEWAY - A driveway providing frontage for dwelling units in a cluster development or master planned development which is part of the common open space.

COMMON OPEN SPACE - A parcel or parcels of land or an area of water, or a combination of land and water within a development site, designed to be owned in common by all those having ownership in the development, which may include common drives, utilities, stormwater control facilities, recreation facilities.

COMMUNICATIONS ANCILLARY EQUIPMENT - The buildings, cabinets, vaults, enclosures, and equipment required for operation of all communications antennas, including, but not limited to, repeaters, equipment housing, ventilation, and other mechanical equipment.The buildings, cabinets, vaults, closures, and equipment required for operation of all communications antennas, including, but not limited to, repeaters, equipment housing, ventilation, and other mechanical equipment.

COMMUNICATIONS ANCILLARY EQUIPMENT COMPOUND - The entire area that is composed of a square, circle, or rectangle, whichever most closely encompasses all structures, panel boxes, and other components of the communications ancillary equipment necessary to operate a communications antenna.

COMMUNICATIONS ANTENNA - Any antenna device, including mounting and supporting fixtures, conduits, ducts, electronics, and control boxes, used for all types of wireless communication services, such as radio, television, cellular phone, pager, mobile radio, internet, or any other wireless communication, regardless of the geographical area the transmission of signals is intended to serve. This definition shall include data collection units, distributed antenna systems, small cell communications systems, and similar systems. This definition shall not include private, residence-mounted radio, television, citizens band, or amateur radio antennas; GPS surveying equipment or their supporting structures; any antenna device that is installed to boost emergency 911 signals within a building, structure, or site; or any antenna device that is otherwise located wholly within a building and designed for the primary purpose of transmission of signals to users within such building.Any antenna device, including mounting and supporting fixtures, conduits, ducts, electronics, and control boxes, used for all types of wireless telecommunication services, such as radio, television, cellular phone, pager, mobile radio, or any other wireless communication, regardless of the geographical area the transmission of signals is intended to serve. This definition shall include data collection units, distributed antenna systems, small cell communications systems, and similar systems. This definition shall not include private, residence-mounted radio, television, citizens band, or amateur radio antennas; GPS surveying equipment or their supporting structures; or any antenna device that is installed to boost emergency 911 signals within a building, structure, or site.

COMMUNICATIONS ANTENNA, BUILDING-MOUNTED - A communications antenna that is attached to and supported by a building, or any portion thereof.

COMMUNICATIONS ANTENNA, UTILITY-MOUNTED – A communications antenna that is attached to and supported by a utility pole, traffic light pole, streetlight or similar structure, excluding a building.

COMMUNICATIONS ANTENNA SITE – The entire site area located outside of a public right-of-way that includes the boundaries of the leased or owned property surrounding a communications antenna

and all other support structures and ground-mounted communications ancillary equipment necessary to operate the communications antenna and any access or utility easements related to the site.

COMMUNICATIONS TOWER – Any structure that is used for the primary purpose of supporting one or more communications antennas, such as self-supporting lattice towers, guy towers, and monopoles, but excluding buildings, utility poles, traffic light poles and streetlights. This definition shall also not include any communications tower that may be required for the following events:

1. Any temporary communications tower constructed for a special event, provided that the tower will not be located on the premises for more than 30 days;; that the height of the tower will not exceed 100 feet; and that the tower will be set back from all property lines at a distance that is equal to its height including all attached communications antennas.

2. Any temporary communications tower that may be required in response to a natural disaster or other emergency event.

~~Any structure that is used for the purpose of supporting one or more communications antennas, such as self-supporting lattice towers, guy towers, monopoles, utility poles, and traffic light poles, but excluding buildings. This definition shall also not include any communications tower that may be required for a special event, provided the tower will not be located on the premises for more than 30 days; the height of the tower will not exceed 100 feet; and the tower will be set back from all property lines at a distance that is equal to its height, including all attached communications antennas.~~

COMMUNITY EVENT – An event that is held or sponsored by a non-profit, civic or charitable organization, that is either in support of the organization or those that will be aided by the services of the organization.

CONCESSION STAND – An accessory facility, typically a walk-up bar or kiosk, where patrons of an entertainment or recreational venue can purchase food and beverage items and/or souvenirs. No additional seating is provided outside of the main seating areas for the principal entertainment or recreational use.

CONDITIONAL USE - A use permitted only in a particular zoning district pursuant to the provisions of this Chapter.

CONFERENCE & ~~AND~~ MEETING CENTERS - A facility used for service organizations, business and professional conferences, and seminars limited to accommodations for conference attendees, including catering not prepared on site for conference attendees but not including sleeping quarters.

CONSERVATION AREAS AND USES - A designated area which is intended for the conservation of plants, animals, or habitat, and which only allows visitors in a limited capacity.

CONTROLLED SUBSTANCES - A drug, substance or immediate precursor as defined in Schedules 1 through 5 of the Pennsylvania Controlled Substance, Drug, Device and Cosmetic Act, 35 P.S. § 780-104, or any amendments thereto.

COUNTRY CLUB - A club with recreation facilities for members, their families, and invited guests.

CREMATORY[CWE30] **-** A building or site containing apparatus intended for use in the act of cremation.

DATA COLLECTION UNIT - A communications antenna that is utilized as a means to collect data regarding the usage of a specific service, which is then used to enhance operations of the service provider, such as the antenna and equipment associated with wireless smart meters utilized by a public or private utility company.

DEVELOPMENT - Any man-made change to improved or unimproved real estate, including but not limited to the construction, reconstruction, renovation, repair, expansion, or alteration of buildings or other structures; the placement of manufactured homes; streets and other paving; utilities; filling, grading and excavation; mining; dredging; drilling operations; storage of equipment or materials; and the subdivision of land.

DISABILITY - An individual with a physical or mental impairment that substantially limits one or more of the major life activities of the individual; record of such an impairment; or being regarded as having such an impairment.

DISTRIBUTED ANTENNA SYSTEM (DAS) - A dispersed network of communications antenna sites that distributes wireless transmission frequencies from a central hub to wireless users throughout a geographical service area, lot, or structure with poor coverage or inadequate capacity.

DOMESTIC ANIMAL - Animals which customarily and historically have been kept for agricultural purposes within Derry Township such as, but not limited to, cattle, horses, sheep, goats, pigs, chickens, turkeys and geese.

DOMESTIC PET - Animals which are customarily kept for personal use or enjoyment in conjunction with a residential use; such as, dogs, cats, small mammals (such as hamsters and gerbils), reptiles, and small amphibious animals (such as frogs, turtles and fish), but excluding other domestic and nondomestic animals as defined by this Chapter.

DRIVE-THROUGH SERVICE - A service provided to customers of a business where the customers may complete business transactions or purchases at a drive-up facility without ever leaving the automobile. This shall include, but not necessarily be limited to, banking, pharmacy, food, and beverage services, regardless of whether the item may be ordered in advance of arrival at the site or ordered while in a drive-through lane on the site via a menu board ordering intercom system.

DWELLING UNIT (D.U.) - A building or part of a building including cooking, living and sanitary facilities, designed and intended for occupancy by one person or family. A travel trailer occupied less than 180 days, boarding or rooming house, convalescent home, skilled nursing home, life care facility, fraternity or sorority house, hotel, motel, inn, bed & breakfast home, lodge or other similar use shall not constitute a dwelling unit.

DWELLING UNIT, INSTITUTIONAL - A dwelling unit within a life care facility or skilled nursing home.

DWELLING, MULTIFAMILY APARTMENT - A dwelling unit in a building in which dwelling units share vertical and horizontal party walls with other dwelling units.

DWELLING, SINGLE-FAMILY ATTACHED (TOWNHOUSE) - A dwelling unit in a building containing three or more dwelling units sharing two vertical party walls, except that the end units have a single party wall.

DWELLING, SINGLE-FAMILY DETACHED - A free-standing dwelling unit which has no common or party walls with other units.

DWELLING, SINGLE-FAMILY SEMIDETACHED - A dwelling unit having one party wall in common with a similar dwelling unit.

DWELLING, TWO-FAMILY DETACHED - A free-standing dwelling unit in a building containing two dwelling units with one dwelling unit arranged over the other dwelling unit.

DWELLINGS FOR EMPLOYEES & STUDENTS - Units constructed for the purposes of housing employees and/or students of an associated business or institution

EASEMENT - The right to use or reserve the property of another for a specified purpose.

EFFECTIVE CAPACITY RATING - A system of measuring the development potential of a lot based on environmental or man-made constraints.

EXISTING MANUFACTURED HOME PARK OR SUBDIVISION - A manufactured home park or subdivision for which the construction of facilities for servicing the lots on which the manufactured homes are to be affixed (including, at a minimum, the installation of utilities, the construction of streets, and either final site grading or the pouring of concrete pads) is completed before the effective date of the floodplain management regulations adopted by a community.

EXERCISE AND FITNESS CENTER - A business establishment where patrons use weights, machines, or other such equipment or floor space for the purpose of physical exercise and/or wellness. Exercise and fitness centers may include health spas and concession stands.

EXPANSION TO AN EXISTING MANUFACTURED HOME PARK OR SUBDIVISION - The preparation of additional sites by the construction of facilities for servicing the lots on which the manufactured homes are to be affixed (including the installation of utilities, the construction of streets, and either final site grading or the pouring of concrete pads).

FAMILY - A single individual doing his own cooking and living upon the premises as a separate housekeeping unit, or a collective body of persons doing their own cooking and living together upon the premises as a separate housekeeping unit in a domestic relationship based upon birth, legal marriage or other domestic bond. This definition shall not include a collective body of persons occupying a hotel, dormitory, lodge, boarding house, commune or institution.

FAMILY CHILD CARE HOME - A private single-family residence where care, protection and supervision are provided, for a fee, to no more than six children at one time, including those residing in the home under the age of 16 years.

FARM HOME OCCUPATION - Secondary occupation to the principal agricultural use of a farm which is conducted by the resident or residents of the farm.

FENCE PANEL - A structure made of metal, stone, concrete, wire, wood, vinyl, or other material that spans between posts or is otherwise supported in, above, or against the ground, generally used to define boundaries of property or to prevent entry into or escape from the area it surrounds or for ornamental, security, or screening purposes, but not including retaining walls.

FINANCIAL INSTITUTION - A bank, savings and loan association, credit union, trust company, finance company, or loan company.

FIRE/EMERGENCY SERVICES - A facility or facilities which offers safety and emergency services, such as, but not limited to, fire stations, police stations, and emergency and medical ambulance services.

FLOOD - A temporary inundation of normally dry land areas.

FLOOD INSURANCE RATE MAP (FIRM) - The official map on which the Federal Emergency Management Agency has delineated both the areas of special flood hazard and the risk premium zones applicable to the community.

FLOOD INSURANCE STUDY (FIS) - The official report provided by the Federal Emergency Management Agency that includes flood profiles, the Flood Insurance Rate Map, the Flood Boundary and Floodway Map, and the water surface elevation of the base flood.

FLOODPLAIN AREA - A relatively flat or low land area which is subject to partial or complete inundation from an adjoining or nearby stream, river, or watercourse; and/or any area subject to the unusual and rapid accumulation of surface waters from any source.

FLOODPROOFING - Any combination of structural and nonstructural additions, changes, or adjustments to properties and structures which reduce or eliminate flood damage to lands or improved real property; water and sanitary facilities; and structures and contents of buildings.

FLOODWAY - The channel of a river or other watercourse and the adjacent land areas that must be reserved in order to discharge the base flood without cumulatively increasing the water surface elevation more than one foot.

FLOOR AREA - The sum of the gross horizontal areas of the floors of a building measured from the interior faces of the exterior walls, excluding stairwells, elevator shafts, those portions of floor areas having a clear ceiling height of less than six feet, floor areas devoted to automobile parking (not retail sales areas) accessory to the principal use of the property, and floor areas of floors which are located at least 50% below finished grade, which are used for accessory uses.

FOOD CATERING - A business establishment which prepares and serves meals or refreshments for entertainment primarily off the premises.

FOOD SERVICES WITH DRIVE-THROUGH - An establishment where customers may place their food and/or beverage orders at a counter or table inside the facility or from the customer's vehicle outside the facility by use of drive-through service and/or take-out food service, including drive-in service, where food is principally brought to a vehicle.

FOOD SERVICES WITHOUT DRIVE THROUGH – An establishment that provides service where food and/or beverages are ordered, served, and consumed by the customer normally while seated at a table, booth, or counter. Up to four parking spaces may be restricted for limited curb-side service when the parking spaces dedicated to this use are surplus to the number of parking spaces otherwise required for the site.

FOOD TRUCK - A mobile food vendor business in which food that is prepared and made ready for consumption at the point of sale is sold from or out of a motor vehicle that does not exceed eight feet in width or 25 feet in length and that is removed each day from the location where the food is sold.

FUEL SERVICE – MINOR - A facility which may include retail and/or food service with the ability to serve fuel to no more than eight (8) vehicles simultaneously.

FUEL SERVICE – MAJOR - A facility which may include retail and/or food service with the ability to serve fuel to more than eight (8) vehicles simultaneously.

FULL CUTOFF LIGHTING UNIT - A lighting unit in its mounted form that allows no direct light from the lighting unit above a horizontal plane through the lighting unit's lowest light emitting part.

FULL CUT-OFF - The luminous intensity (in candelas) at or above an angle of 90° above nadir is zero, and the luminous intensity (in candelas) at or above a vertical angle of 80° above nadir does not numerically exceed 10% of the luminous flux (in lumens) of the lamp or lamps in the luminaire. (IESNA 2000)

FUNERAL HOME - A business establishment licensed by the Commonwealth of Pennsylvania that contains a suitable storage room for the deceased and may include embalming facilities and rooms for the display and burial ceremonies of the deceased, but excludes a crematory.

GARAGE SALE - The sale or offering for sale of five or more new, used or secondhand items of personal property at any one residential premises at any one time. This term shall include all sales in residential areas entitled "garage sales," "yard sales," "tag sale," "porch sale," "lawn sale," "attic sale," "basement sale," "rummage sale," "flea market sale" or any similar casual sale of tangible personal property.

GLARE - The sensation produced by luminance within the visual field that is sufficiently greater than the luminance to which the eyes are adapted to cause annoyance, discomfort or loss in visual performance and visibility.

GOLF COURSES

A. **CONVENTIONAL GOLF COURSE** A golf course with a minimum of 2,800 yards of play in nine holes.

B. **SPECIAL GOLF COURSE** Any form of golf which is not included under the definition of conventional golf course, such as, driving ranges, disc golf, or pitch-and-putt, but excluding miniature golf.

GRAIN MILLING - A facility that uses milling devices to break down grains through grinding, crushing, or cutting, and may or may not store the unprocessed and processed grain on the premise.

GROUP CHILD CARE FACILITY - A building or structure other than an occupied dwelling unit, where care, protection and supervision are provided on a regular schedule, at least once a week to more than six children.

GROUP HOME FOR PERSONS WITH DISABILITIES - A dwelling shared by four, but not more than eight persons with disabilities, excluding resident staff, who live together as a single housekeeping unit and in a long-term, family-like environment in which staff persons provide care, education and participation in community activities for the residents with the primary goal of enabling the resident to live as independently as possible in order to reach their maximum potential. Persons with disabilities shall not include persons who currently use or are addicted to a controlled substance, nor shall it include any person whose residency in the home would constitute a direct threat to the health and safety of other individuals. The term "group home for persons with disabilities" shall not include alcoholism or drug treatment centers, work release facilities for convicts or ex-convicts or other housing facilities serving as an alternative to incarceration. Licensing for such use shall be in accordance with the Pennsylvania Department of Human Services requirementsDepartment of Human Services __#__.

GROUP HOME FOR PERSONS WITHOUT DISABILITIES - A dwelling shared by four, but not more than eight persons without disabilities, excluding resident staff, who live together as a single housekeeping unit and in a long-term, family-like environment in which staff persons provide care, education and participation in community activities for the residents with the primary goal of enabling the resident to live as independently as possible in order to reach their maximum potential. Licensing for such use shall be in accordance with the Pennsylvania Department of Human Services requirements__#__.

GUEST LODGING, DINING & CONFERENCE FACILITY - A facility used for service organizations, business and professional conferences, and seminars limited to accommodations for conference attendees, including catering that is prepared on site and lodging provided on site for conference attendees.

GYM (or GYMNASIUM) - See Exercise and Fitness Center

HEALTHCARE PRACTITIONER'S OFFICE - A business establishment where one (1) or more state licensed medical professionals provide general medical, pediatric, eye, dental, and/or psychiatric treatment and/or diagnostic services to the general public, and may include uses such as reception

areas, waiting areas, consultation rooms, x-ray and a dispensary, provided that all such uses shall have access only from the interior of the building or structure. A healthcare practitioner's office shall not have overnight accomodations (hospital) or provide outpatient medical treatment services. A business establishment where one (1) or more state licensed medical professionals provide medical, dental, and/or psychiatric treatment and/or diagnosis services to the general public without overnight accommodation and may include uses such as reception areas, waiting areas, consultation rooms, x-ray and a dispensary, providing that all such uses shall have access only from the interior of the building or structure. Any facility for other narcotic treatment programs approved by the Pennsylvania Department of Health shall not be considered a health practitioner office use.

HEALTH SPA - a commercial establishment offering health and beauty treatment, such as massages, therapeutic baths, fitness activities, and other such treatments.

HEIGHT - The maximum height of a building and/or structure measured from the average finished grade at perimeter of the base of the building and/or structure to the highest point of such building and/or structure. (See maximum height exception, §225-**206.I**.)

HEIGHT, FRONT FACADE - The height of the building face fronting on a public street or adjacent to the front yard area.

HELIPORT - An area of land or water or a structural surface which is designed, used or intended to be used for the landing and take-off of helicopters, and any appurtenant areas which are designed to be used for helicopter support facilities, such as maintenance, refueling and parking.

HERSHEY LEGACY-RELATED ARTWORK - Graphics under official Hershey-related corporation copyright relaying imagery of company products and/or services.

HIGHEST ADJACENT GRADE - The highest natural elevation of the ground surface prior to construction next to the proposed walls of a structure.

HIGH TRAFFIC INDUSTRIAL USES - An industrial use whose facilities in the Township of Derry are frequented by a minimum of 7,500 truck trips per year.

HISTORIC STRUCTURE - For the purposes of the floodplain management regulations, and more specifically, as used in the definition of "substantial improvement," the definition of "historic structure" is any structure that is:

A. Listed individually in the National Register of Historic Places (a listing maintained by the Department of the Interior) or preliminarily determined by the Secretary of the Interior as meeting the requirements for individual listing on the National Register; or

B. Certified or preliminarily determined by the Secretary of the Interior as contributing to the historical significance of a registered historic district or a district preliminarily determined by the Secretary to qualify as a registered historic district; or

C. Individually listed on a state inventory of historic places in states which have been approved by the Secretary of the Interior; or

D. Individually listed on a local inventory of historic places in communities with historic preservation that have been certified either:

   (1) By an approved state program as determined by the Secretary of the Interior; or

   (2) Directly by the Secretary of the Interior in states without approved programs.

HOME-BASED BUSINESS, NO IMPACT – A use as defined by the Pennsylvania Municipalities Planning Code. Said use shall be an accessory use for the purposes of this Zoning Ordinance.

HOME OCCUPATION - An activity, intended to be financially gainful, conducted within a dwelling unit, the conduct of which is clearly incidental and secondary to the use of the dwelling unit. Unlike a No-Impact Home Based Business, Home Occupations provide opportunity for on-site customers and therefore, also permit restricted signage opportunity.

HORSE RIDING STABLES & FACILITIES, EXCLUDING HORSE RACING - A facility used for commercial riding of horses and/or ponies to the general public, which may or may not include boarding and/or riding lessons for students and the training of horses for riding, but does not include the intended breeding of horses.

HOSPITAL - An institution ~~having on overnight-stay patient capacity of over 100 persons,~~ providing medical care and treatment for ill and/or injured humans that includes overnight-stay and related medical teaching facilities.

HOTEL - A building used primarily for providing more than 10 transient lodging accommodations on a daily rate basis to the general public in which the lodging rooms provide no cooking facilities.

HOTEL, RESIDENCE - A building used primarily for providing more than 10 transient lodging accommodations on a daily rate basis to the general public in which the majority of the lodging rooms provide cooking facilities.

IMPERVIOUS COVER (a.k.a. IMPERVIOUS SURFACE and IMPERVIOUS AREA) - A surface of a lot that has been compacted or covered with material to the extent that it is highly resistant to infiltration by water. Impervious cover (surface or area) shall include, but is not limited to: conventional impervious surfaces such as paved streets, roofs, compacted stone, and sidewalks. Impervious cover shall consist of surfaces similar to the following when used by motor vehicles or pedestrians, unless designed and approved as an infiltration BMP: graveled areas, paver blocks (including voids), bricks, and cobblestone. The water area of swimming pools shall not be considered to be impervious surface if the overflow system of the pool is connected to a sanitary sewer system. Decks are not counted as impervious area if they allow rain to drain through them and do not prevent infiltration.

IMPORTING AND EXPORTING ESTABLISHMENT - See WAREHOUSING.

INCINERATORS AND CREMATORIUMS (FOR ON-SITE GENERATED MEDICAL WASTE) - A facility, typically accessory in nature to an institution's principal use, which involves the burning of wastes produced by hospitals, veterinary facilities, and medical research facilities. These wastes include both infectious medical wastes as well as non-infectious, general housekeeping wastes.

INDUSTRIAL EQUIPMENT SALES AND REPAIR - A business establishment specializing in the sales and/or repair of industrial equipment that may be used in manufacturing, fabricating, and processing.

INFILTRATION BMP - Any best management practice stormwater facility designed, approved, and maintained or used to direct runoff into the ground.

JUNK - Any discarded, unusable, scrap, or abandoned man-made or man-processed material or articles, which may include but shall not be limited to the following materials: metals, home furnishings, appliances, glass, plastics, machinery, building materials, containers, junk vehicles and parts thereof, wastepaper, trash, rope, batteries, and rubber debris. Junk shall not include regulated

solid waste temporarily stored in an appropriate container that is routinely awaiting imminent collection and proper disposal, or items for recycling that are clearly awaiting imminent collection and are temporarily stored in an appropriate container.

JUNKYARD/SALVAGE YARD – An area of land exceeding 200 square feet, used for the storage of junk outside of a completely enclosed structure, with or without the dismantling, salvage, sale, or other use or disposition of such junk. For the purposes of this Chapter, the deposit or storage of two or more junk vehicles shall be deemed to constitute a junkyard. Junkyards shall not be considered to the facilities for recycling of paper, glass, and metal products when approved by the provisions of this Chapter.

KENNEL - A use in which three or more animals other than livestock, horses or poultry are kept, boarded, raised, bred, groomed, or trained, for a fee.

LABORATORY - A facility for scientific research, analysis, investigation, testing, or experimentation of natural resources, medical resources, and manufactured materials.

LAMP - The component of a lighting unit that produces light.

LANDSCAPE BUFFER – A use of new or existing plants, earthen mounds, fences, and/or walls located between two uses, or between one use and a public right-of-way, that is intended to lessen negative impacts, such as undesirable views, noise or light, of the more intense use on the less intense use or on the public right-of-way..

LANDSCAPE AND GARDEN SERVICE, NON-RETAIL - A business establishment which specializes in the installation and/or care of lawns, landscaping, and general property maintenance including snow removal, with all retail transactions occurring off-site.

LANDSCAPING AND GARDEN CENTER, RETAIL - A business establishment which specializes in the retail sale of plants, soils, landscaping tools, hardscape and other landscaping and garden accessories.

LAUNDERING & DRY CLEANING, INDUSTRIAL - A building, portion of a building, or premises used or intended to be used for cleaning fabrics, textiles, wearing apparel, or articles of any sort by immersion and agitation, or by immersions only, in volatile solvents including, but not limited to, solvents of the petroleum distillate type, and/or the chlorinated hydrocarbon type, and the processes incidental thereto.

LAUNDROMAT - A commercial facility where patrons wash, dry, or dry clean clothing or other fabrics in machines operated by the patron.

LAUNDRY, COMMERCIAL - A facility where the washing, drying, or dry cleaning of fabrics in machines operated by the staff of the facility occurs for customers.

LED - Light-emitting diode.

LIBRARIES - A public enterprise for the use, but no the routine sale of literary, musical, artistic, or reference materials.

LICENSED MEDICAL PROFESSIONAL - An individual, licensed by the Commonwealth of Pennsylvania, who provides preventive, curative, promotional or rehabilitative health care services in a systematic way to people, families or communities.

LIFE CARE FACILITY - A premises in which food, shelter and personal assistance or supervision are provided for a period exceeding 48 consecutive hours for more than three adults who are not relatives

of the operator and who require assistance or supervision in such matters as dressing, bathing, diet or medication prescribed for self-administration. Residents shall consist primarily of elderly people who shall be defined as those 55 years of age or older. Residency shall be limited to those persons who need such assistance due to physical disability resulting from old age, injuries or illnesses not caused by alcohol or drug dependency, but who would not qualify for skilled or intermediate nursing care. A life care facility shall not provide skilled nursing care or intermediate nursing care nor shall the personal care boarding homelife care facility include any other institution or facility defined and regulated by the Pennsylvania Department of Health.

LIGHTING UNIT - A complete lighting unit, including a lamp or lamps together with the parts designed to distribute the light, to position and protect the lamps and to connect the lamps to the power supply.

LOADING SPACE - An off-street space on the same lot as a building or use which is to be used for the temporary parking of a commercial vehicle while loading or unloading merchandise or materials and which abuts a street or other appropriate means of access.

LOT - A designated parcel, tract or area of land or water established by a plat or otherwise as permitted by law.

LOT AREA, NONRESIDENTIAL - A lot used or intended to be used exclusively for nonresidential purposes.

LOT, CORNER - A lot which abuts two intersecting streets. Corner lots shall have a front yard area adjacent to each street frontage, not including alleys, with remaining yards being considered side yards.

LOT, DOUBLE FRONTAGE - A lot which abuts two generally parallel streets, not including alleys. Double frontage lots shall be required to provide a rear yard area adjacent to the secondary street frontage

LOT MINIMUM AREA - The minimum area of a horizontal plane, bounded by the property lines of a lot as established by deed and/or as shown on a subdivision plan, excluding space within any street right-of-way, but including the area of any other right-of-way or easement.

LOT MINIMUM DEPTH - The minimum horizontal length of the shallowest lot dimension perpendicular to the street right-of-way line.

LOT MINIMUM WIDTH - The minimum horizontal distance between side lot lines measured at the minimum required front yard line and at the street right-of-way line.

LOWEST FLOOR - The lowest floor of the lowest fully enclosed area (including basement) of a structure or building. An unfinished, flood-resistant partially enclosed area, used solely for parking of vehicles, building access, and incidental storage, in an area other than a basement area, is not considered the lowest floor of a building, provided that such space is not designed and built so that the structure is in violation of the applicable nonelevation design requirements of this Chapter.

LUMBER MILL OR SAW MILL - A facility in which logs are cut into lumber usually with heavy machinery.

MANEUVERING AISLE - A driving lane within an area of designated parking adjacent to parking spaces to provide vehicular access to parking spaces.

MANUFACTURING - A facility in which the mechanical or chemical transformation of materials or substance into new products take place, including the assembling of component parts, the manufacturing of products, and the blundering of materials, such as lubricating oils, plastics, resins, or liquors.

MANUFACTURED HOME - A structure, transportable in one or more sections, which is built on a permanent chassis, and is designed for use with or without a permanent foundation when attached to the required utilities. The term also includes park trailers, travel trailers, recreational and other similar vehicles when they are placed on a site for more than 180 consecutive days.

MANUFACTURED HOME PARK OR SUBDIVISION - A parcel (or contiguous parcels) of land divided into two or more manufactured home lots for rent or sale.

MASTER PLAN - A plan or plans and supporting data required by §225-403501.58401.4 (Overlay DevelopAment approval area Pprocess), to promote and encourage ingenuity in the layout and design of coordinated projects.

MAXIMUM RESIDENTIAL DENSITY - The maximum number of dwelling units per net developable acre.

MEDICAL-RELATED RESEARCH FACILITIES - A facility dedicated to the research of medical-related exploration, which includes laboratories and testing centers.

MEMBERSHIP CLUB - An association or business organized and operated for persons who are bona fide members paying annual dues, and which owns, hires or leases premises, the use of which is restricted to such members and their guests. The affairs and management of such a use are conducted by a board of directors, executive committee, or similar body which is chosen by the members. Food, meals and beverages may be served on such premises, provided adequate cooking and dining room facilities are available. Alcoholic beverages may be sold or served to members and their guests, provided such service is secondary and incidental to the promotion of some other common objective of the organization, and further provided that such sale or service has been properly licensed by the Commonwealth and is otherwise in full compliance with other applicable local, state and federal laws. A membership club shall not be or related to a sexually oriented business.

METAL PRODUCTS FABRICATION, MACHINE/WELDING SHOP - Establishment engaged primarily in the assembly of metal parts, including the following uses that produce metal duct work, tanks, towers, cabinets and enclosures, metal doors and gates, and similar products: blacksmith and welding shop, sheet metal shop, machine shop and boiler shop.

MICRO-DISTILLERY - A business establishment which distills and produces beverage grade spirit alcohol in single batches.

MICRO-BREWERY – a brewery, in accordance with the Pennsylvania Liquor Control Board, that makes no more than 15,000 barrels of beer a year **reserved**

MINOR REPAIR - The replacement of existing work with equivalent materials for the purpose of its routine maintenance and upkeep, but not including the cutting away of any wall, partition or portion thereof; the removal or cutting of any structural beam or bearing support; or the removal or change of any required means of egress, or rearrangement of parts of a structure affecting the exitway requirements; nor shall minor repairs include addition to, alteration of, replacement or relocation of any standpipe, water supply, sewer, drainage, drain leader, gas, oil, waste, vent, or similar piping, electric wiring, or mechanical or other work affecting public health or general safety.

MINERAL EXTRACTION - The extraction of metallic and nonmetallic minerals or materials, including rock crushing, screening, and the accessory storage of explosives.

MIXED USE - A tract of land, building, or structure that contains a variety of complementary and integrated uses that are permitted in the applicable base or overlay zoning district in which the building is located, and arranged in a compact urban form. Typically mixed use includes a combination of residential and commercial/office/civic uses arranged vertically (in multiple stories of a single building) or horizontally (in adjacent buildings).

MOBILE HOME - a transportable, single family dwelling intended for permanent occupancy, contained in one unit, or in two or more units designed to be joined into one integral unit capable of again being separated for repeated towing, which arrives at a site complete and ready for occupancy except for minor and incidental unpacking and assembly operations, and constructed so that it may be used without a permanent foundation. For the purposes of this Ordinance, mobile homes shall be required to meet any applicable regulations of the Floodplain Overlay, as indicated for a manufactured home. Under no circumstances shall a park trailer, travel trailer, recreational and other similar type vehicle be permitted to be placed on a mobile home lot, or within a mobile home park, and used as a permanent place of residency.

MOBILE HOME LOT - a parcel of land in a mobile home park, improved with the necessary utility connections and other appurtenances necessary for the erections thereon of a single mobile home.

MOBILE HOME PARK - a parcel or contiguous parcels of land which has been so designated and improved that it contains two or more mobile home lots for the placement thereon of mobile homes.

MOTEL - see Hotel.

MOTOR VEHICLE REPAIR GARAGES - A use of a structure, or portion thereof, in which major vehicle services occur. Major vehicle services include all services permitted in automotive lubrication facilities; engine and transmission repair, rebuilding, or reconditioning; collision servicing, such as body, frame, or fender straightening or repair; tire replacement; brake and suspension replacement; glass replacement; and overall painting of automobiles.

MOTOR VEHICLE SALES AND SERVICE - A use of a property and/or structure, or portion thereof, in which the sale of automobiles, vans, trucks, or similar vehicles occurs. Such use includes the accessory repair work and services related to the sale of such automobiles, vans, trucks, or similar vehicles.

MUNICIPAL BUILDING AND USES - Any building or use owned or operated by the Township or by an authority created by the Township or under contract to the Township which shall include, but not be limited to, facilities operated by or for administration, police, recreation, and public works uses.

MURAL - A mural is the application of paint, acrylic or other material directly onto, or on a changeable panel attached to the exterior surface of a building wall, or other structure, excluding signs and roofs, whose sole purpose is to create an aesthetic design to commemorate or depict a scene or event of natural, social, cultural or historic significance and including historical commercial messages and/or logos, but not including commercial messages and/or logos related to activities occurring on the premises. The name of the artist, sponsor, and year of installation/completion is permitted, but shall not exceed 3 square feet.

MUSEUM - A facility for the public display of items, materials, or information that is related to some historic, educational, cultural, entertainment, or scientific purpose or a building whose structure itself is of historic, architectural or cultural significance and whose interpretation relates primarily to the building's architecture, furnishings and history. Museums can include related accessory uses (e.g., restaurant, gift shop, etc.) so long as these remain incidental to the primary museum use. Museums can be operated as a business but shall not involve the routine retail sales of museum displays.

NET DEVELOPABLE ACRE - The net acreage of a lot which is used for calculating the maximum density permitted which is determined by utilizing the various effective capacity ratings as they may apply to any land constraints existing on the lot (see §225-___).

NET DEVELOPABLE AREA - The net area of a lot which is used for calculating the maximum density permitted which is determined by utilizing the various effective capacity ratings as they may apply to any land constraints existing on the lot (see §225-___).

NEW CONSTRUCTION - Structures for which the start of construction as herein defined commenced on or after the effective date of this Chapter. This term does not apply to any work on a structure existing before the effective date of this Chapter.

NEW CONSTRUCTION (IN FLOODPLAIN OVERLAY) - Structures for which the start of construction commenced on or after September 30, 1977, and includes any subsequent improvements thereto.

NEW MANUFACTURED HOME PARK OR SUBDIVISION - A manufactured home park or subdivision for which the construction of facilities for servicing the lots on which the manufactured homes are to be affixed (including, at a minimum, the installation of utilities, the construction of streets, and either final site grading or the pouring of concrete pads) is completed on or after the effective date of floodplain management regulations adopted by a community.

NONCONFORMING LOT - A lot the area or dimension of which was lawful prior to the adoption or amendment of this Chapter, but which fails to conform to the requirements of the zoning district in which it is located by reason of such adoption or amendment.

NONCONFORMING STRUCTURE - A structure or part of a structure manifestly not designed to comply with the applicable use, lot coverage, dimensional and other provisions or extent of use provisions of this Chapter, where such structure lawfully existed prior to the enactment of this Chapter. Such nonconforming structures include but are not limited to nonconforming signs.

NONCONFORMING USE - A use, whether of land, building or structure, which does not comply with the applicable provisions of this Chapter or amendment heretofore or hereafter enacted, where such use was lawfully in existence prior to the enactment of this Chapter or amendment.

NONDOMESTIC ANIMAL – Any wild animal, reptile, insect, or fowl, which is not naturally tame or gentle, but is of a wild nature or disposition and which, because of its size, vicious nature, or other characteristic, may constitute a danger to human life or property if improperly handled.

NONSTREET FRONTING SIGN - Signs erected on the premises where the activity or business is being conducted and which are not visible or meant to be visible from outside the property.

OFF-STREET - Any area not consisting of a street right-of-way area.

ONE HUNDRED YEAR FLOOD - A flood that has one chance in 100, or a 1% chance, of being equaled or exceeded in any year. For the purposes of this Chapter, the 100-year flood (base flood) as defined by the Federal Insurance Administration, U.S. Department of Housing and Urban Development, in the most current Flood Insurance Study, Township of Derry, Dauphin County, Pennsylvania.

OTHER SCIENTIFIC RESEARCH, DEVELOPMENT AND TRAINING - A facility in which the research, development, and testing within laboratories occur, which does not include mass manufacturing, fabricating, processing, or sale of products.

OUTDOOR LIGHTING - Illumination from a lighting unit intended to illuminate the area outside of an enclosed structure, including those lighting units located in enclosed structures, but which illuminate the area outside of the enclosed structure.

OUTPATIENT MEDICAL TREATMENT FACILITY – A business establishment that provides medical services in a specific area of medicine, and contains advanced equipment and highly trained, specialized staff. These facilities may include surgery, imaging, medical laboratory, physical therapy, cancer and chemotherapy, narcotic and substance abuse, cardiology, gastrointestinal and similar type treatment centers. A general care practitioner may be located on site; however, a healthcare practiotners office shall not be a principal use of the facility. Overnight (hospital) accomodations shall not be permitted.

PaDEP - Pennsylvania Department of Environmental Protection, or its successor agency.

PARKS, PLAYGROUNDS AND RECREATION - A facility or facilities which include parks, recreational facilities such as swimming pools, skating rinks, recreational centers and other recreational areas and facilities (excluding golf courses). This also includes areas of land suitable for the development of specific active recreation facilities or leisure time activities, usually of a formal nature and often performed with others, requiring equipment and taking place at prescribed places, sites or fields, including but not limited to baseball fields, soccer fields, football fields, tennis, basketball and other court games, hockey facilities, multipurpose fields and community swimming pools and attendant facilities.

PARKING LOT - A space other than a truck terminal, area for car/camper sales, street, alley or access drive used for the temporary parking of vehicles, including the maneuvering isles and all areas containing required parking landscaping.

PARKING STRUCTURE/LOT, PRIVATE - An area of land or a structure not operated for private profit but rather for use by the employees, lessees, invitees and guests of the property owner for the purpose of providing temporary, daily or overnight parking of motor vehicles for a use which may or may not be located on the same premises as the private parking lot or structure.

PARKING STRUCTURE/LOT, COMMERCIAL - An area of land or a structure used by the general public for the purpose of providing temporary, daily or overnight off-street parking of motor vehicles for a use which may or may not be on the same premises as the commercial parking lot or structure.

PENNSYLVANIA MUNICIPALITIES PLANNING CODE - Pennsylvania Act 247, enacted by the General Assembly of Pennsylvania on July 31, 1968, as amended, 53 P.S. § 10101 et seq.

PERSON - An individual, partnership, public or private association or corporation, firm, trust, estate, municipality, governmental unit, public utility or any other legal entity whatsoever, which is recognized by law as the subject of rights and duties.

PERSONAL SERVICE ESTABLISHMENT - A business in which services are offered to an individual relating to the hygiene or appearance of an individual such as, but not limited to, barber shops, hair salons, manicurists, acupuncturists, massage therapy, health spas, weight loss centers, tanning salons, hair replacement or removal facilities, and the like.

PET GROOMING FACILITIES - A business establishment devoted exclusively to the grooming and hygienic cleaning of domestic pets but not overnight housing, breeding, and/or sale of domestic pets.

PLACE OF WORSHIP/PLACE OF ASSEMBLY - An institution that people regularly attend to participate in or hold religious worship services, community-wide activities and/or related meetings.

PLANNING COMMISSION - The Planning Commission of the Township of Derry.

PRINCIPAL BUILDING OR STRUCTURE – The building(s) on a lot in which the principal use(s) are conducted.

PRINCIPALLY ABOVE GROUND - Where at least 51% of the actual cash value of a structure, less land value, is above ground.

PRINTING AND PUBLISHING - A facility for the reproduction, collation and/or binding of printed materials and/or the custom reproduction of written or graphic materials on a custom order basis for individuals or businesses. Typical processes include, but are not limited to, film processing, photocopying, oversized plotting, screen printing, offset printing, and book binding.

PRISON - Any governmental (whether federal, state, county or local), quasi-governmental, or private institution or facility engaged in the act of confining, housing or holding inmates accused or convicted of criminal activity, assigned and/or committed by any court and who are housed, held or confined in lawful custody, including, but not limited to, the detention, treatment, rehabilitation or execution of offenders through a program involving penal custody, parole and probation..

PROCESSING - A system of operations which produce actions, changes, or functions which result in a finished product or component.

PUBLIC HEARING - A formal meeting held pursuant to public notice by the Township Board of Supervisors, Township Zoning Hearing Board or Township Planning Commission, intended to inform and obtain public comment.

PUBLIC NOTICE - A notice made pursuant to the Pennsylvania Municipalities Planning Code, as amended.

PUBLIC REALM - Space that belongs to all including streets, right-of-ways, parks, green spaces and other outdoor places that require no key to access them and are available, without charge for everyone to use.
PUBLIC REALM -

RECREATION FACILITIES FOR EMPLOYEES, FACULTY AND STUDENTS - A business establishment, owned by a private-sector entity(ies), generally intended for use by employees, faculty and/or students where said use provides recreation and entertainment related to the employee, faculty and/or student activities.

RECREATIONAL, SPORTS, AND ENTERTAINMENT FACILITIES (PRIVATE) - A business establishment, owned by a private-sector entity(ies), generally intended to provide recreation or entertainment for use by a paying clientele.

RECREATIONAL VEHICLE - A vehicle which meets all of the following:

A. Is built on a single chassis.

B. Is not more than 400 square feet, measured at the largest horizontal projections.

C. Is designed to be self-propelled or permanently towable by a light-duty truck.

D. Is not designed for use as a permanent dwelling but as temporary living quarters for recreational, camping, travel, or seasonal use.

RECYCLING CENTER - A facility in which recoverable resources, such as newspapers, magazines, books, and other paper products, glass, metal , plastic, Styrofoam, and other products are recycled, reprocessed, and treated to return such products to a condition in which they may again be used for production.

REGULATORY FLOOD ELEVATION - The base flood elevation (BFE) plus a freeboard safety factor of 1 1/2 feet.

RENTAL AND LEASING BUSINESS - A business establishment that specializes in the rental and leasing of equipment.

REPLACEMENT MOBILE HOME - A mobile home which replaced an existing nonconforming mobile home.

RESEARCH/TECHNOLOGY BUSINESS INCUBATOR - A building or portion thereof which may include the following uses: Scientific research, product development and training (the "primary use"); manufacturing, fabrication, testing or repair directly related to the primary use; and/or accessory administrative and business offices directly related to said primary use.

RESIDENT/OWNER - The owner of a dwelling unit who shall reside in such dwelling unit.

RESIDENTIAL HOUSING AREA - A parcel of land on which a dwelling unit is located.

RETAIL, LARGE-SCALE - A business establishment engaged in selling goods or merchandise to the general public for personal or household consumptions and rendering services incidental the sale of such goods and has a footprint greater than 10,000 sq. ft.

RETAIL, SMALL-SCALE - A business establishment engaged in selling goods or merchandise to the general public for personal or household consumptions and rendering services incidental the sale of such goods and has a footprint less than 10,000 sq. ft.

RIGHT-OF-WAY - An area of publicly- or privately-owned land encumbered by reservation, dedication, forced dedication, prescription, or condemnation that is occupied or intended to be occupied by a street, walkway, railroad, electric transmission line, oil or gas pipeline, water line, sanitary or storm sewer line, and other similar uses. Generally, this definition also includes the right of one to pass over the property of another and is, at times, synonymous with the term 'easement.'

SATELLITE ANTENNA – ~~[POTENTIAL UPDATE FORTHCOMING PER 2016 COMMUNICATIONS ORDINANCE WORK/COMMENTS]~~ A device incorporating a reflective surface which is solid, open mesh or bar configured, and is in the shape of a shallow dish, spherical dish, cone, horn or cornucopia. Such device shall be used to receive and/or transmit radio or electromagnetic waves between terrestrially and/or orbitally based uses. This definition shall include, but shall not be limited to, what are commonly referred to as satellite earth stations, TVRO (television reception only satellite dish antenna), and satellite microwave antennas.

SCHOOL - A facility that provides on-site instruction of a State-approved curriculum including but not limited to elementary, secondary and post-secondary education

SEAT - A seating unit or device, or each 24 linear inches of benches, pews or space for loose chairs or similar seating facilities, assumed to have a row center-to-center spacing of 30 inches and seat center-to-center spacing of 24 inches.

SELF-SERVICE STORAGE FACILITY - A building or group of buildings that contain varying sizes of individual, compartmentalized and controlled storage stalls or lockers, for the storage of household goods, business goods, contractors supplies, automobiles, boats or camping vehicles.

SERVICE AND REPAIR FACILITIES - A business establishment specializing in the service and repair of electronics and/or household appliances.

SERVICE AND REPAIR OF LAWN MAINTENANCE EQUIPMENT AND SMALL ENGINE REPAIR - A business establishment specializing in the service and repair of lawn maintenance equipment and small engines, which may also sell new and/or used lawn equipment accessories as a secondary function.

SEWAGE TREATMENT PLANTS - A facility designed for the collection, removal, treatment and disposal of human waste present within the sewage of a given service area.

SEXUALLY ORIENTED BUSINESS - An adult arcade, adult bookstore, adult novelty store, adult cabaret, adult theater, escort agency, nude model studio or sexual encounter or mediation center.

A. ADULT ARCADE - Any place to which the public is permitted or invited wherein coin-operated, slug-operated, or for any form of consideration, or electronically, electrically, or mechanically controlled still or motion picture machines, projectors, video or laser disc players, or other image-producing devices are maintained, not located within viewing booths, to show images to five or fewer persons per machine at any one time, and where the images so displayed are distinguished or characterized by the depicting or describing of "specified sexual activities" or "specified anatomical areas".

B. ADULT BOOKSTORE OR ADULT NOVELTY STORE means an establishment having a substantial or significant portion of its stock and trade in, or an establishment which as one of its principal business purposes offers for sale or rental, any of the following:

    1. Books, magazines, periodicals or other printed matter, or photographs, films, motion pictures, video cassettes or video reproductions, slides, CD ROM discs or other computer software, and other visual representations, which are distinguished or characterized by their emphasis on matter depicting, describing or relating to specified sexual activities or specified anatomical areas, and in conjunction therewith may have viewing booths or other facilities for the presentation of adult entertainment for observation by patrons; or

    2. Instruments, devices, or paraphernalia which are designed for use in connection with "specified sexual activities".

C. ADULT ENTERTAINMENT:

    1. An exhibition of any adult oriented motion pictures, meaning those distinguished or characterized by an emphasis on matter depicting, describing or relating to specified sexual activities or specified anatomical areas; or

    2. A live performance, display or dance of any type, which has as a significant or substantial portion of the performance any actual or simulated performance of specified sexual activities or exhibition and viewing of specified anatomical areas or persons in a state of nudity; or

    3. Films, motion pictures, video cassettes, slides or other photographic reproductions or visual presentations of any other kind which are characterized by the depiction or description of "specified sexual activities" or "specified anatomical areas".

D. ADULT THEATER - A theater, tavern, banquet hall, party room, conference center, restaurant, night club, hall, auditorium, club, recreation center, indoor amusement center or similar commercial establishment which, as one of its principal business purposes, offers adult entertainment.

E. EMPLOYEE - For this portion of the Ordinance, a person who performs any service on the premises of an Sexually Oriented Business on a full-time, part-time or contract basis, whether or not the person is denominated an employee, independent contractor, agent or otherwise and whether or not said person is paid a salary, wage or other compensation by the operator of said business. Employee does not include a person exclusively on the premises for repair

or maintenance of the premises or equipment on the premises, or for the delivery of goods to the premises.

F. ESCORT - A person who, for consideration, agrees or offers to act as a companion, guide, or date for another person, or who agrees or offers to privately model lingerie or to privately perform a striptease for another person.

G. ESCORT AGENCY -A person or business association who furnishes, offers to furnish, or advertises to furnish escorts as one of its primary business purposes for a fee, tip, or other consideration.

H. ESTABLISH - Includes any of the following:

1. The opening or commencement of any Sexually Oriented Business as a new business;

2. The conversion of an existing business, whether or not an Sexually Oriented Business, to any Sexually Oriented Business;

3. The addition or change of any Sexually Oriented Business to any other existing Sexually Oriented Business or to a non-Sexually Oriented Business; or

4. The relocation of any Sexually Oriented Business.

I. LICENSEE means a person in whose name a license to operate a Sexually Oriented Business has been issued, as well as the individual listed as an applicant on the application for a license; and in the case of an employee, a person in whose name a license has been issued authorizing employment in a Sexually Oriented Business.

J. NUDE MODEL STUDIO means any place where a person who appears in a state of nudity, or who displays "specified anatomical areas" and is provided to be observed, sketched, drawn, painted, sculptured, photographed, or similarly depicted by other persons who pay money or any form of consideration. Nude Model Studio shall not include a proprietary school licensed by the State of Pennsylvania or a college, junior college or university supported entirely or in part by public taxation; a private college or university which maintains and operates educational programs in which credits are transferable to a college, junior college, or university supported entirely or partly by taxation; or in a structure:

1. That has no sign visible from the exterior of the structure and no other advertising that indicates a nude person is available for viewing; and

2. Where in order to participate in a class a student must enroll at least three days in advance of the class; and

3. Where no more than one nude model is on the premises at any one time.

K. NUDITY OR A STATE OF NUDITY means the showing of any part of the human male or female genitals, pubic area, vulva, anus, anal cleft or cleavage with less than a fully opaque covering, the showing of the female breast with less than a fully opaque covering of any part of the nipple, or the showing of the covered male genitals in a discernible turgid state.

L. SEXUAL ENCOUNTER OR MEDIATION CENTER means a business, agency or person which, for consideration, provides for commercial purposes a place where persons, not all members of the same family, may congregate, assemble or associate for the purpose of

engaging in specified sexual activities or exposing specified anatomical areas as defined herein:

M. SPECIFIED ANATOMICAL AREAS means human genitals, pubic region, anus, buttocks, female breast(s) below a point immediately above the top of the areola, or human male genitals in a discernibly turgid state even if completely covered.

N. SPECIFIED CRIMINAL ACTIVITY means any of the following offenses:

1. Prostitution or promotion of prostitution; dissemination of obscenity; sale, distribution or display of harmful material to a minor; sexual performance by a child; possession or distribution of child pornography: public lewdness; indecent exposure; indecency with a child; engaging in organized criminal activity; sexual assault; molestation of a child; gambling; or distribution of a controlled substance; or any similar offenses to those described above under the criminal or penal code of other states or countries;

2. For which:

(a) Less than two years have elapsed since the date of conviction or the date of release from confinement imposed for the conviction, whichever is the later date, if the conviction is of a misdemeanor offense;

(b) Less than five years have elapsed since the date of conviction or the date or release from confinement for the conviction, whichever is the later date, if the conviction is of a felony offense; or

(c) Less than five years have elapsed since the date of the last conviction or the date of release from confinement for the last conviction, whichever is the later date, if the convictions are of two or more misdemeanor offenses or combination of misdemeanor offenses occurring within any twenty-four month period.

3. The fact that a conviction is being appealed shall have not effect on the disqualification of the applicant or a person residing with the applicant.

O. SPECIFIED SEXUAL ACTIVITIES means any of the following;

1. The massaging, fondling, or other erotic touching of human genitals, pubic region, buttocks, anus, or female breasts;

2. Sex acts, normal or perverted, actual or simulated, including intercourse, oral copulation, masturbation, or sodomy; or

3. Human genitals in a state of sexual stimulation or arousal.

P. TRANSFER OF OWNERSHIP OR CONTROL of a Sexually Oriented Business means and includes any of the following:

1. The sale, lease or sublease of the business;

2. The transfer of securities which constitute a controlling interest in the business, whether by sale, exchange, or similar means; or

3. The establishment of a trust, gift, or other similar legal advice which transfer the ownership or control of the business, except for transfer by bequest or other operation of law upon the death of the person possessing the ownership or control.

Q. VIEWING BOOTHS means booths, stalls, partitioned portions of a room, cubicles, stalls, compartments, rooms or other enclosures which are available to members of the public, patrons or members for viewing (1) films, movies, videos, or visual reproductions of any kind depicting or describing "specified sexual activities" or "specified anatomical areas," or (2) persons who appear in a state of nudity or who offer performances or presentations characterized by the exposure of "specified anatomical areas" or by "specified sexual activities."

SHARED PARKING - Use in common of parking spaces among different structures and uses, including structures and uses in separate ownership from the parking spaces, and structures and uses on lots which are not contiguous to the lots containing the parking spaces.

SHARED PARKING SPACES - The parking spaces which are located in areas of the Township which are subject to a shared parking agreement and which are subject to shared parking under as permitted by Section 225-401402.4. A shared parking space must be available for parking by the invitees of all sharing land uses. A parking space shall not be considered unavailable because a fee is charged for use of the space or because there is a limit on the time period for which the space may be used.

SHARING LAND USES - The land uses (e.g., retail stores, business and professional offices, financial institutions, nonprofit museums, places of worship, municipal buildings, restaurants, and hotels) which are located in the Downtown Core Overlay on the lots which are subject to the shared parking agreement or in other areas of the Township subject to the shared parking under Section 225-401402.4, and the invitees (e.g., employees, customers, clients, patrons, and visitors) of which have the right to park in the shared parking spaces under the shared parking agreement.

SIDEWALK VENDING UNIT (PUSHCART) - A mobile food vendor business in which food that is prepared on the cart or elsewhere and is ready for consumption at the point of sale, is sold from or out of a nonmotorized mobile piece of equipment or nonmotorized vehicle that is removed each day from the location where the food is sold.

SIGN - Any advertisement, announcement, direction, communication, or outdoor advertising device produced in whole or in part by constructing, erecting, affixing, or placing a structure on land or on any other structure, or produced by painting, pasting, or otherwise placing any printing, lettering, picture decoration, symbol, trademark, figured object, colored material, or any other device on any building, structure, or surface, including those of vending machines and fuel dispensing devices, which is employed to announce, direct attention to, identify, or make known. Vegetation arranged or shaped in such a manner to depict a symbol or lettered communication shall not be considered a sign. Street lights having shades which resemble Hershey's Kisses, or any Hershey legacy-related artwork, or any attraction branding affixed to the attraction within the confines of Hersheypark, shall not be considered to be signs. In addition, nonadvertising signs specifically highlighting the heritage of the Hershey community, or stained glass windows or doors which depict religious messages or themes shall not be considered to be signs. Any advertisement, announcement, direction, communication or outdoor advertising device produced in whole or in part by constructing, erecting, affixing or placing a structure on land or on any other structure, or produced by painting, pasting or otherwise placing any printing, lettering, picture decoration, symbol, trademark, figured object, colored material or any other device on any building, structure or surface, including those of vending machines and fuel dispensing devices, which is employed to announce, direct attention to, identify or make known. Vegetation arranged or shaped in such a manner to depict a symbol or lettered communication shall not be considered a sign. Chocolate Avenue sStreet lights having shades which resemble Chocolate Kisses, noror any Hershey legacy-related artwork, or any attraction branding

affixed to the attraction within the confines of Hersheypark (excluding buildings), shall not be considered a sign., nonadvertising In addition, nonadvertising signs specifically highlighting the heritage of the Hershey community nor shall stained glass windows or doors which depict religious messages or themes shall not be considered to be signs. The following terms shall have the meanings indicated:

ATTRACTION BRANDING – Any words, lights, images, shapes, and/or graphics used to adorn and identify a single themed ride or attraction, where the words, lights, images, shapes, and/or graphics are affixed to the attraction or incorporated into its design. Attraction branding is meant to provide a themed visual experience to the patrons of the attraction and is not intended to solely promote a product, business, or the entire facility or venue to the general public.

AWNING SIGN - A sign on a fixed or retractable fabric shelter that is supported entirely from the exterior wall of an enclosed building and is used to shield a door or window.

BANNER - A sign intended to be hung, either with or without a frame, which sign is made of cloth or similarly flexible material, but excluding flags as permitted by the provisions of this Chapter.§ ___.

BILLBOARD - A sign having a sign area in excess of 32 square feet permitted by conditional use and not otherwise defined as a highwall sign or a landmark sign.

BLADE – See Projecting Sign.

BUILDING IDENTIFIER – Text or symbols located on the exterior face of a building that identifies the address, name, or purpose of the building within a campus or planned area development, which conveys no advertising value and is meant only to direct visitors to the desired point of interest. Examples include 30 Hope Drive, Ⓟ or parking, Hershey Middle School, and Founders Hall.

CANOPY - A sign displayed on a structure made of fabric, plastic, metal or similar material that is supported by posts, columns, another structure and/or building, such as, but not limited to, gas station canopies, porte-cochères, or similar structures

CELEBRATION FLAG - An ornamental flag such as those symbolizing the theme of a celebration and/or the recognition of a season, holiday, theme or event, with no commercial advertising value.

COMMERCIAL ENTERTAINMENT IDENTIFICATION SIGN - A sign located in the Commercial Entertainment Zoning District, which complies with the provisions of Article IV of this Chapter.

DIRECTIONAL SIGN - A sign providing necessary information to facilitate safe and efficient traffic flow and is located on a site other than the site of the facility or event to which the sign directs. The sign must direct to a facility or event located within Derry Township.

DRIVE-THROUGH MENU READER BOARD - A sign that provides information concerning the menu of a food service or restaurant establishment, intended to provide information and advertising to drive-through patrons of the establishment, and which contains no advertising or print of a scale intended to bear advertising to the general off-premises public.

FLASHING, BEACON, STROBE, OR MOVING SIGN - A sign with any visible moving or rotating parts, flashing or intermittent illumination or color changes caused by electrical, mechanical or other means. Electronic moving message boards, time-temperature sign and search lights are included in this definition.

FREE-STANDING SIGN - A sign not more than eight feet in height, which is not attached to any building but is supported in poles, frames or similar structures.

GRAND OPENING SIGN - A temporary sign publicizing an event at which a new establishment announces its official opening to the public.

GROUND SIGN - A free-standing sign located on, or close to the ground, the height of which is not more than four feet above the ground.

HIGHWALL – A sign located on the face of and toward the top of a principal building on a lot where said sign is geared to two-dimensional display for identifying non-retail, non-food-service, non-residential and non-industrial uses to a regional audience.

INFLATABLE SIGN - An advertising device, including tethered balloons, for the primary purpose of advertising that is either expanded to its full dimension and/or supported by gases contained within the sign or its sign parts, at a pressure greater than atmospheric pressures, or is otherwise inflated by a constantly propelled flow of air.

INFORMATION SIGN - An on-premises sign conveying instructions or directions with respect to the use of the premises including parking, entrance-exit signs, signs noting the availability of rest rooms, telephones or other public conveniences on the property where the use occurs.

INTERACTIVE SIGN - An electronic sign that interacts with electronic signals emitted from motor vehicles or their passengers. This term specifically excludes signs of a constituted governmental body and signs meant to safely direct traffic.

LANDMARK SIGN - A sign and sign structure attached to the ground or attached to a building permitted in the Downtown Sign Zoning Overlay This type sign is designed to add interest and ingenuity and must be dimensional or 3-d in construction. It is permitted with or without wording and used for the purposes of identifying a unique feature or distinct element of business operations.

LAMPPOST FLAG - An ornamental flag which symbolizes a celebration, season, holiday, theme or event, which flag is attached to a lamppost supporting privately owned lighting fixtures used to light the parking lot of a commercial or industrial center.

MARQUEE - any type of permanent construction cantilevered from the wall of a building above an entrance and extending over a street or sidewalk, or part thereof, and not supported by ground posts.

MENU BOARD - A free-standing sign or wall sign that provides information concerning the menu of a food service or restaurant establishment, which sign is less than 2 square feet.

MULTIUSE IDENTIFICATION SIGN - A sign used on a site which is occupied by separate entities on a single parcel of land which sign is used to advertise more than one entity.

NEON SIGN - A sign that uses neon, argon, or any similar gas to illuminate transparent or translucent tubing or other materials, or a sign that is designed to create a similar visual effect.

NONSTREET FRONTING SIGN – A sign erected on the premises where the activity or business is being conducted and which are not visible from outside the lot.

NOT READABLE - A signs which has text or logos at a size that is not readily readable form the closest viewing point from the public right-of-way or public street. Appendix ____A shall be used to determine readability.

OPEN FLAG – A flag bearing the word “OPEN” displayed outside a business during business hours.

PERMANENT WINDOW SIGN – A sign affixed directly on or behind a translucent surface, including windows and doors, that are visible from the exterior.

POLE SIGN - A free-standing sign greater than eight feet, but not more than 15 feet, in height, supported on poles, frames or similar structures.

PORTABLE SIGN - Any sign which is movable and not permanently affixed to a building, structure or the ground such as, but not limited to, sidewalk signs and sandwich boards.

PROHIBITION SIGN - A sign erected on a property to protect or preserve said property, such as a "No Trespassing," "No Dumping," or "No Hunting" sign.

PROJECTING SIGN - A sign mounted on a wall to the building surface and extending with the exposed face of the sign perpendicular to the plane of such wall. Includes a blade sign.

ROOF SIGN - A sign erected over or on, and wholly or partially dependent upon, the roof of any building or structure for support, or attached to the roof in any way.

SANDWICH BOARD SIGN (a.k.a. "A" frame sign or sidewalk sign) - A free-standing, two-sided, self-supporting, temporary sign, with no moving parts or lights, with a changeable panel, letters or "chalkboard", displayed outside a business during business hours, to advertise the business's hours of operation, an event, a promotion, etc. It is not intended as permanent business signage.

SCOREBOARD - A sign contained within an athletic field and intended solely to provide information to the attendees of an athletic event.

TEMPORARY CONTRACTOR'S SIGN - A sign installed to advertise the contractor completing construction work on a property, whether commercial or residential in nature, and is removed once all construction activities have been completed. The sign may also identify the future use of the property once construction is completed.

TEMPORARY DIRECTIONAL SIGN - Directional signs deemed necessary to facilitate safe and efficient traffic flow for special sports, school, entertainment, amusement, recreational, theatrical, cultural or historical events.

TEMPORARY WINDOW SIGN - Signs affixed directly on or behind a translucent surface, including windows and doors that are visible from the exterior, and which are displayed for not more than 30 days.

VEHICLE SIGN - A permanent or temporary sign affixed, painted on or placed in or upon any parked vehicle, parked trailer or other parked device capable of being towed, which is displayed in public view for the primary purpose of attracting the attention of the public to a business or activity rather than to serveunder such circumstances as to location, time of day, duration and availability of other parking space, which circumstances indicate that the primary purpose of said display is to attract the attention of the public rather than to reflect the customary use and association of such vehicle to a business or activity. Vehicle signs shall include those sign indicated herein on vehilcles parked in a stationary location for a period in excess of 96 hours. The display of signs advertising the sale of such a vehicle shall not be considered to be a vehicle sign for the purpose of this definition.

WALL SIGN - A sign attached to the wall of a building or structure or to a structure projecting from the face of the building, with the exposed face of the sign parallel to the plane of such wall.

WAYFINDING SIGN - A system of signs that direct visitors and residents to multiple points of interest, facilities and/or businesses within Derry Township. This term excludes "directional signs" as defined herein.

SIGN AREA - The entire area of messaging within a single continuous perimeter, and a single plane, in a composition of adjacent squares, triangles, circles or rectangles, whichever most closely encloses the extreme limits of the message, background and trim. Multiple sign areas on a single support structure system shall be considered one sign. Any supportive frame, bracing or sign base members having no advertising value of a sign shall not be included in the sign area calculations. The sign area shall be computed as follows:

A. Single-faced sign: one face counted.

B. Double-faced sign: one face counted if both sign areas are identical; two faces counted if each face is not identical.

C. "V" sign with an internal angle of 45° or greater: two faces counted. If internal angle is less than 45°, the sign shall be considered a double-faced sign.

D. Three-dimensional sign: projected to single flat planes, all visible sign areas counted.

SIGN HEIGHT - The dimension from the top of any point on a sign including its support structure to the lowest point within 10 feet of the base of the sign where it meets the ground, unless otherwise specified in this Chapter.

SINGLE-FAMILY CONVERSION - The act of taking a dwelling unit which existed prior to the adoption of these regulations and converting it into a building containing two (2) units each with individual cooking, living and sanitary facilities, designed and intended for occupancy by one family.

SITE AREA - The total area of a parcel of land exclusive of existing public street rights-of-way.

SKILLED NURSING HOME - A facility in which skilled nursing care and a variety of other related medical or health services are provided for individuals who are not in need of hospitalization, but who are, because of age, illness, disease, injury, convalescence or physical or mental infirmity, in need of such care. Services may be rehabilitative in nature, or they may include hospice care for terminally ill individuals. Licensing for such use shall be in accordance with Pennsylvania Department of Human Services requirements~~A facility in which skilled nursing care and related medical or other health services are provided for individuals who are not in need of hospitalization, but who are, because of age, illness, disease, injury, convalescence or physical or mental infirmity, in need of such care. Licensing for such use shall be in accordance with Pennsylvania __#__~~.

SMALL CELL COMMUNICATIONS SYSTEM - Any wireless communications antenna or technology, other than a distributed antenna system or a data collection unit, that is low-powered and designed to deploy wireless transmission frequencies from a central hub communications antenna or satellite, to local wireless users, whether indoors or outdoors, for the purposes of providing or boosting service coverage or deploying bandwidth within an intended geographical area.~~Any small scale wireless communications antenna or technology, other than a distributed antenna system or a data collection unit, that is low-powered and designed to deploy wireless transmission frequencies from a central hub or communications antenna to local wireless users, whether indoors or outdoors, for the purposes of providing or boosting service coverage to areas containing inadequate capacity within the confines of that area, or other intended geographical area.~~

SOLID OR LIQUID WASTE TRANSFER STATIONS - A facility where solid waste from collection vehicles is consolidated and temporarily stored for subsequent transport to a permanent disposal site, not including infectious waste facility.

SPECIAL BULK CONTAINER - Large receptacles or bulk containers, such as dumpsters or solid waste storage containers, which are used at the primary central collection point for the regular temporary storage of solid waste.

SPECIAL EXCEPTION USE - A use permitted only in a particular zoning district pursuant to the provisions of this Chapter.

SPECIAL FLOOD HAZARD AREA (SFHA) - An area in the floodplain subject to a one-percent or greater chance of flooding in any given year. It is shown on the FIRM as Zone A, AO, A1-30, AE, A99, or AH.

SPECIALTY HOME - any dwelling or portion of any dwelling containing a single cooking area used as a rental for a period of less than thirty (30) consecutive days for up to two (2) individuals per

bedroom serving a maximum of ten (10) individuals. Children under the age of three (3) are excluded from this count.

SPORT AND FIELD COMPLEXES - A recreational facility consisting of multiple fields and athletic venues, which may be either indoor or outdoor facilities. These facilities may include other elements, such as exercise and fitness centers and other recreational, entertainment or sports facilities and concession stands.

SPORTING AND ENTERTAINMENT ARENAS AND STADIUMS - A principal use that includes a structure with seats for spectators to observe sporting, recreational, or entertainment events.

START OF CONSTRUCTION - Start of construction as used in this Chapter includes land preparation, such as clearing, grading and filling; installation of streets and/or walkways; excavation for a basement, footings, piers or foundations and erection of temporary forms. For mobile homes not within a mobile home park or mobile home subdivision, start of construction means the start of the initial preparation of the site to accept the mobile home. For mobile homes within mobile home parks or mobile home subdivisions, start of construction is the date on which the construction of facilities for servicing the site on which the mobile home is to be affixed is started, or, if already established, the date of affixing the mobile home to the permanent foundation.

START OF CONSTRUCTION (AS USED IN THE FLOODPLAIN OVERLAY) - Includes substantial improvement and other proposed new development and means the date the permit was issued, provided the actual start of construction, repair, reconstruction, rehabilitation, addition, placement, or other improvement was within 180 days from the date of the permit. The "actual start" means either the first placement of permanent construction of a structure on a site, such as the pouring of slab or footings, the installation of piles, the construction of columns, or any work beyond the stage of excavation; or the placement of a manufactured home on a foundation. Permanent construction does not include land preparation, such as clearing, grading, and filling; nor does it include the installation of streets and/or walkways; nor does it include excavation for a basement, footings, piers, or foundations or the erection of temporary forms; nor does it include the installation on the property of accessory buildings, such as garages or sheds not occupied as dwelling units or not part of the main structure. For a substantial improvement, the actual "start of construction" means the first alteration of any wall, ceiling, floor, or other structural part of a building, whether or not that alteration affects the external dimensions of the building.

STEALTH DESIGN - Camouflaging methods used to minimize the visual impacts of communications antennas, communications towers, and communications ancillary equipment, which render these facilities more aesthetically appealing by concealment in existing, proposed, or mock buildings, structures, or facades, and/or by blending the design of the facilities with an existing supporting structure or to the visual character of structures, such as existing utility poles or streetlights that are located in close proximity to the proposed facilities. The intent of such methods seek to render the proposed facilities less invasive to the visual context and character of the surrounding environment by a casual observer.

STREET – An improved or unimproved cartway used or intended to be used by vehicular traffic not otherwise defined herein as driving lanes or access lanes. In addition to those terms defined within the Township Subdivision and Land Development Ordinance, the following shall apply.

A. Local Roads. A public street designed to provide access to abutting lots and to discourage through traffic.

B. Alley. A public thoroughfare, with a right-of-way of less than 30', which does not provide the primary frontage

C. Lane. A public thoroughfare, located internal to a lot, which serves as a means of circulation between structures, parking areas and/or access to garages/service aisles.

D. Cul-de-sac. A dead-end street with a vehicular turnaround at the dead end.

STRUCTURE - Anything constructed or erected on the ground or attached to the ground, or attached to something having a location on the ground, including, but not limited to, buildings, sheds, manufactured homes, and other similar items. This term includes any man-made object having an ascertainable stationary location on or in land or water, whether or not affixed to land.

STRUCTURE (AS USED IN THE FLOODPLAIN OVERLAY) - A walled and roofed building, including a gas or liquid storage tank, that is principally aboveground, as well as a manufactured home.

SUBDIVISION - The division or redivision of a lot, tract, or parcel of land by any means into two or more lots, tracts, parcels, or other divisions of land, including changes in existing lot lines, for the purpose, whether immediate or future, of lease, partition by the court for distribution to heirs or devisees, transfer of ownership or building or lot development; provided, however, that the subdivision by lease of land for agricultural purposes into parcels of more than 10 acres, not involving any new street or easement of access or any residential dwelling, shall be exempted.

SUBSTANTIAL DAMAGE - Damage from any cause sustained by a structure whereby the cost of restoring the structure to its before-damaged condition would equal or exceed 50% or more of the market value of the structure before the damage occurred.

SUBSTANTIAL IMPROVEMENT -

A. Any reconstruction, rehabilitation, addition, or other improvement of a structure, the cost of which equals or exceeds 50% of the market value of the structure before the start of construction of the improvement. This term includes structures which have incurred substantial damage, regardless of the actual repair work performed. The term does not, however, include either:

   (1) Any project for improvement of a structure to correct existing violations of state or local health, sanitary, or safety code specifications which have been identified by the local code enforcement official and which are the minimum necessary to assure safe living conditions; or

   (2) Any alteration of a historic structure, provided that the alteration will not preclude the structure's continued designation as a historic structure.

B. For the purposes of this definition "substantial improvement" is considered to occur when the first alteration of any wall, ceiling, floor or other structural part of the building commences, whether or not that alteration affects the external dimensions of the structure. The term does not, however, include either:

   (1) Any project for improvement of a structure to comply with existing State of local health, sanitary or safety code specifications which are solely necessary to assure safe living conditions; or

   (2) Any alteration of a structure listed on the National Register of Historic Places or a State Inventory of Historic Places.

TAXIDERMY - A business establishment specializing in the preparation, stuffing, and mounting of animal skins.

TECHNICALLY INFEASIBLE - Little likelihood of an improvement being accomplished because existing conditions would require removing or altering an essential part of a structure or landscape; or because other existing physical or site constraints prohibit modification or addition of elements, spaces, or features which are in full and strict compliance with the minimum requirements for new construction and which are necessary to provide accessibility.

THEATER AND AUDITORIUM - A business establishment, principally devoted to showing motion pictures and/or live performances, which may contain other performance-related facilities.

TOWNSHIP - The Township of Derry, Dauphin County, Pennsylvania.

TRAFFIC CONTROL DEVICE - A device used for controlling or directing the flow of traffic to include such items as traffic signals, median strips, curbing, lane separating devices and directional signage.

TRUCK TERMINAL - A building or area in which freight brought by truck is assembled and/or stored for routing or reshipment which may include storage areas, parking areas, service facilities and wash facilities for trucks.

UNDERLYING ZONING DISTRICT - The composite of all base and overlay zoning districts.

UNIFORM CONSTRUCTION CODE (UCC) - The statewide building code, adopted by the Pennsylvania General Assembly in 1999, as amended, applicable to new construction in all municipalities, whether administered by the municipality, a third party, or the Department of Labor and Industry. Applicable to residential and commercial buildings, the code adopted the International Residential Code (IRC) and the International Building Code (IBC), by reference, as the construction standard applicable to the state floodplain construction. For coordination purposes, references to the above are made specifically to various sections of the IRC and the IBC.

UNIQUE BUILDINGS - A building that is without reasonable economic value if used for those uses permitted by right or by special exception, due to the unique nature of the building, the purpose for which it was originally designed and the costs of renovation.

USE - The specific purpose for which land or a building or structure is designed, arranged, intended or for which it is or will be occupied or maintained.

USE, ACCESSORY - A use customarily incidental and subordinate to the principal use and located on the same lot with such principal use.

USE, BY-RIGHT - A use permitted by this Chapter without any special consideration having to be given by the Township Zoning Hearing Board or the Township Board of Supervisors.

USE, CONDITIONAL - A use permitted only in a particular zoning district pursuant to the provisions of Section 501 of this Chapter.

USE, PRINCIPAL – The main use of land, building(s) or structures(s) as distinguished from an accessory use.

USE, SPECIAL EXCEPTION - A use permitted only in a particular zoning district pursuant to the provisions of Section 502 of this Chapter.

UTILITY - An agency which, under public franchise or ownership, or under certificate of convenience and necessity, provides the public with electricity, gas, heat, steam, communication, rail transportation, water, stormwater or sewage collection or the tangible facilities thereof.

UTILITY BUILDING - A building which is used for the administration or functioning of public or private utility, not including a building that houses communications ancillary equipment.

UTILITY SERVICE STRUCTURE - A structure, not including a building, a communications antenna or a communications tower as defined in this article, which is a necessary part of a public utility system.

VEGETATIVE COVER, MINIMUM - The minimum area of a lot that is required to be maintained in a pervious surface condition which is predominantly covered with live plant matter, trees and/or vegetative ground cover. The temporary loss of vegetative cover due to seasonal planting activities such as farming shall not be considered a loss of vegetative cover as long as vegetative cover exists annually for at least four months.

VEHICLE, JUNK - Any inoperable vehicle, recreational activity vehicle, or utility vehicle that meets any of the following conditions:

A. In regards to a vehicle designed to move under its own power: The vehicle cannot be moved under its own power, other than a vehicle clearly needing only minor repairs;

B. In regards to a recreational activity vehicle or utility vehicle designed to be towed: The vehicle cannot be towed;

C. The vehicle has been demolished beyond repair;

D. The vehicle has been separated from its axles, engine, body, or chassis;

E. The vehicle consists of only the axle, engine, body parts, and/or chassis, which is separated from the remainder of the vehicle;

F. The vehicle does not contain a current license or registration; and/or

G. The vehicle is otherwise unworthy for road travel in accordance with applicable local, state, or federal regulations as determined by the Township Zoning Officer.

VEHICLE LAMP - A lamp which is customarily used in the operation of a vehicle which lamp is part of the vehicle and which lamp is powered by the vehicle's energy source.

VEHICLE, RECREATIONAL ACTIVITY - A vehicle, other than an automobile or truck (regardless of size), designed to be self-propelled or towed or carried by an automobile or truck, commonly used for recreational purposes. Recreational activity vehicles include travel trailers, motorized dwellings, campers, boats, snowmobiles, gliders, airplanes, gyrocopters, all-terrain vehicles, tent trailers, and similar vehicles. The term does not include self-propelled wheelchairs or electric mobility devices operated by and designed for the exclusive use of a person with a mobility-related disability.

VEHICLE, UTILITY - A vehicle, other than an automobile or truck (regardless of size), designed to be self-propelled or towed or carried by an automobile or truck, commonly used for hauling of materials, possessions, animals, or other nonrecreational vehicles. A utility vehicle may be open on all four sides (with or without sideboards) or completely enclosed, and have one or more axles. Utility vehicles include dump trailers, car dollies, boat trailers, horse trailers, tractors, semi-trailers, and similar vehicles. The term does not include self-propelled wheelchairs or electric mobility devices operated by and designed for the exclusive use of a person with a mobility-related disability.

VETERINARY HOSPITAL – A facility for the medical care and treatment of domestic animals and/or domestic pets which employs more than 3 veterinarians, and which allows for overnight stay of animal patients during the treatment process if deemed necessary by a licensed veterinarian.

VETERINARY OFFICE - A building or portion of a building used primarily for the treatment by a veterinarian of small domestic animals and/or domestic pets which employs 3 or fewer veterinarians and which may allow for overnight stay of animal patients if deemed necessary by a licensed veterinarianduring the treatment process. No outdoor boarding of animals is permitted.

VIOLATION - For flood damage prevention purposes, the failure of a structure or other development to be fully compliant with the Township's floodplain management regulations. A structure or other

development without the elevation certificate, other certifications, or other evidence of compliance required in 44 CFR (Code of Federal Regulations) § 60.3(b)(5), (c)(4), (c)(10), (d)(3), (e)(2), (e)(4), or (e)(5) is presumed to be in violation until such time as that documentation is provided.

VIOLATION - The act of not meeting specific conditions or requirements of this Chapter (i.e., noncompliance).

VISITOR CENTER - A building or portion of a building devoted to the distribution of information for visitors and other travelers, which may include retail sales.

WAREHOUSING - A building or structure used for the storage and handling of goods, materials, freight, or merchandise awaiting sale on another lot or location, but not including the maintenance or fueling of commercial vehicles. Warehousing which does not constitute in excess of thirty (30) percent of the total floor area of the retail establishment shall be excluded from this definition.

WASTE - A material whose original purpose has been completed and which is directed to a disposal or processing facility or is otherwise disposed. The term does not include source separated recyclable material or materials approved by PaDEP for beneficial use.

WASTE MANAGEMENT FACILITY - A facility for the disposal of waste, including a municipal and/or residual solid waste landfill, composting facility or incinerator facility, meeting the standards of the Federal Resource Conservation and Recovery Act of 1976, or the Pennsylvania Solid Waste Management Act, 35 P.S. § 6018.101 et seq., as amended.

WHOLESALE TRADE ESTABLISHMENTS - A business establishment specializing in the selling and/or distributing of merchandise to retailers; to industrial, commercial, institutional, or professional business users, or to other wholesalers; or acting as agents or brokers and buying merchandise for, or selling merchandise to, such individuals or companies.

WIND ENERGY CONVERSION SYSTEM - Any windmill, wind turbine, or similar device, including its associated equipment, cables and electrical components, which converts wind power to mechanical or electrical energy.

WINERY - A facility specializing in the agricultural processing of grapes and/or other fruits and vegetables for the fermentation and/or processing of fruit juice into wine or the re-fermenting of still wine into sparkling wine. Wine tasting may occur on the site as an activity concurrent with the winery.

WRITTEN NOTICE - A notice personally delivered or mailed by regular mail stating the time, date and place of an event and the particular nature of matters to be considered.

YARD AREA - An open space area located on the same lot with a building or structure, unoccupied and unobstructed from the ground up, except for such intrusions as are expressly permitted by this Chapter.

DEPTH, FRONT - An open space area extending along the full width of a lot parallel to the front property line or adjacent street right-of-way line, whichever is the closer to the property, which area is unoccupied and obstructed from the ground up, except for such intrusions as are expressly permitted by this Chapter.

DEPTH, REAR - An open space area extending across the full width of a lot parallel to the rear property line or adjacent street right-of-way line, whichever is closer to the property, which area is unoccupied and unobstructed from the ground up, except for such intrusions as are expressly permitted by this Chapter.

DEPTH, SIDE - An open space area extending along the side of a lot parallel to the side lot line, which area shall extend from the front yard area to the rear yard area, except that in the absence of a rear or front yard area the side yard area shall extend the full length of the lot.

ZONING DISTRICT – See BASE ZONING DISTRICT and ZONING OVERLAY.

ZONING HEARING BOARD - The Zoning Hearing Board of the Township of Derry

ZONING MAP - The map(s) collectively delineating the zoning districts and zoning overlays of the Township, together with all amendments subsequently adopted. The zoning maps shall be considered an integral part of this Chapter.

ZONING ORDINANCE - The Derry Township Zoning Ordinance, Ordinance No. ____, as adopted _____, 2016, as amended and as codified as Chapter 225 of the Township of Derry Code of Ordinances, Zoning.

ZONING OVERLAY – An area designated as such on the Township Zoning Map or otherwise noted where provisions that may be more and/or less restrictive than the base zoning district requirements for the applicable lot or portion thereof.

ZOO - An establishment that maintains a collection of nondomestic and/or domestic animals, for study, conservation, care, or display to the public.

§225-_____ Zoning Map amendments.

Reserved.

APPENDIX A

LETTER VISIBILITY CHART

Letter Height	Maximum Impact	Maximum readable distance
5/8"		15'
3/4"		18'
7/8"		21'
1"		24'
1 1/4"		30'
1 1/2"		36'
1 3/4"		42'
2"		48'
2 1/2"		60'
3"	30'	100'
4"	40'	150'
6"	60'	200'
8"	80'	350'
9"	90'	400'
10"	100'	450'
12"	120'	525'
15"	150'	630'
18"	180'	750'
24"	240'	1000'
30"	300'	1250'
36"	360'	1500'
42"	420'	1750'
48"	480'	2000'
54"	540'	2250'
60"	600'	2500'

The distances shown will vary approximatly 10% with various color combinations. Maximum distance in color would be red or black on white background.

Letter visibility chart from sign-source.com which notes that it was prepared by the California Institute of Technology.

APPENDIX B.1

SHARED PARKING DEMAND CHART - WEEKDAY

SHARED PARKING: MONDAY THROUGH FRIDAY																		
TYPE OF USE	**7 AM**	**8 AM**	**9 AM**	**10 AM**	**11 AM**	**12 PM**	**1 PM**	**2 PM**	**3 PM**	**4 PM**	**5 PM**	**6 PM**	**7 PM**	**8 PM**	**9 PM**	**10 PM**	**11 PM**	**12 AM**
ATHLETIC																		
-health club/spa	45	35	45	50	45	45	45	40	40	70	100	100	85	75	20	15	5	0
-team sports/court	45	35	45	50	45	45	45	40	40	70	100	100	85	75	20	15	5	0
-kid playland	0	0	0	40	50	70	80	80	50	60	80	90	100	100	40	5	2	0
AUTO SALES/SERVICE	20	63	93	100	100	90	90	97	93	77	47	23	7	7	3	3	0	0
BANK	20	63	93	100	100	90	90	97	93	77	47	23	7	7	3	3	0	0
BAR	0	0	2	10	10	20	20	10	15	25	40	50	70	90	100	100	100	100
BOWLING ALLEY	0	0	15	20	20	25	30	35	40	40	50	100	100	100	70	40	10	5
CAR WASH	20	63	93	100	100	90	90	97	93	77	47	23	7	7	3	3	0	0
CONFERENCE	0	50	100	100	100	100	100	100	100	100	100	100	100	100	100	50	0	0
CONVENIENCE/GAS	80	100	100	50	40	50	40	40	50	60	100	100	90	80	80	70	50	20
DAY CARE	60	100	80	30	30	50	25	25	25	80	95	25	10	0	0	0	0	0
GOLF																		
-course	100	100	95	90	90	85	90	95	95	95	95	80	60	5	5	2	2	0
-driving range	40	90	100	95	50	100	60	50	50	40	70	90	90	80	40	10	2	0
-mini-golf	0	0	10	10	20	30	30	25	20	25	25	40	60	100	100	80	30	2
HOSPITAL																		
-patients/visits	0	0	50	100	90	50	30	30	30	30	40	80	100	100	60	20	10	10
-doctors/shift	100	100	70	60	70	70	60	60	60	80	80	50	50	40	30	25	20	20
-emp/shift	60	80	90	100	100	100	100	100	100	90	80	80	60	50	40	30	25	25
HOTEL/MOTEL	85	65	55	45	35	30	30	35	35	45	60	70	75	90	95	100	100	100
LODGE/CLUB	0	0	2	10	10	20	20	10	15	25	40	50	70	90	100	100	100	100
MANUFACTURING	75	85	100	100	90	80	85	95	95	95	50	25	10	10	5	5	2	2
MORTUARY	0	0	5	5	2	1	2	5	2	2	1	1	10	20	20	10	0	0
MUSEUM	8	18	42	68	87	97	100	97	95	87	79	82	89	87	61	32	13	0
OFFICE																		
-medical clinic	10	60	100	100	100	80	100	100	100	100	80	10	5	0	0	0	0	0
-general	20	63	93	100	100	90	90	97	93	77	47	23	7	7	3	3	0	0
-call center	20	60	100	100	100	100	100	100	100	100	100	100	100	100	100	90	50	30
POOL/BILLIARDS	0	0	5	15	25	30	25	25	25	25	30	40	60	100	100	100	50	20
RESTAURANT																		
-general	2	5	10	20	30	50	70	60	60	50	70	90	100	100	100	90	70	50
-drive-thru	30	40	10	20	30	70	70	40	30	35	70	100	100	70	40	30	10	5
-take-out	0	5	10	20	80	90	100	50	25	30	60	65	70	65	30	15	5	0
RESIDENTIAL																		
-bed & breakfast	100	100	50	20	10	10	10	10	15	25	50	60	80	90	100	100	100	100
-nursing home	20	60	100	100	100	100	100	100	100	100	100	50	20	20	20	20	20	20
-single family	87	79	73	68	59	60	59	60	61	66	77	85	94	96	98	99	100	100
-elderly apts.	100	90	85	80	70	70	70	70	70	75	85	90	95	95	100	100	100	100
-apartments	87	79	73	68	59	60	59	60	61	66	77	85	94	96	98	99	100	100
-fraternity/sorority	87	79	73	68	59	60	59	60	61	66	77	85	94	96	98	99	100	100
RETAIL	8	18	42	68	87	97	100	97	95	87	79	82	89	87	61	32	13	0
SCHOOL																		
-elementary/jr. high	25	80	100	100	100	80	75	95	95	85	70	25	15	10	5	5	2	2
-high school/college	50	100	100	100	95	70	95	95	85	35	50	20	70	80	80	50	30	15
STADIUM/ARENA	0	0	0	0	0	0	0	0	0	2	5	20	100	100	100	100	50	1
THEATER																		
-movie	0	0	0	0	0	30	70	70	70	70	70	60	90	100	100	100	80	70
-live performance	0	0	2	5	5	5	60	70	70	70	5	5	90	100	100	100	2	0
VIDEO ARCADE	0	0	10	10	15	40	30	10	10	40	60	80	100	100	100	50	20	10
WAREHOUSE/R&D	75	85	100	100	90	80	85	95	95	95	50	25	10	5	2	0	0	0
WORSHIP, PLACE OF	0	0	5	5	2	1	2	5	2	2	1	1	10	20	20	10	0	0

APPENDIX B.2

SHARED PARKING DEMAND CHART - WEEKEND

SHARED PARKING: SATURDAY THROUGH SUNDAY																		
TYPE OF USE	7 AM	8 AM	9 AM	10 AM	11 AM	12 PM	1 PM	2 PM	3 PM	4 PM	5 PM	6 PM	7 PM	8 PM	9 PM	10 PM	11 PM	12 AM
ATHLETIC																		
-health club/spa	5	20	45	60	55	40	40	35	35	50	45	35	25	20	15	5	0	0
-team sports/court	5	20	45	60	55	40	40	35	35	50	45	35	25	20	15	5	0	0
-kid playland	0	0	0	10	10	40	40	20	20	30	60	90	100	100	40	5	2	0
AUTO SALES/SERVICE	7	20	25	25	35	35	30	20	15	15	5	2	2	0	0	0	0	0
BANK	7	20	25	25	35	35	30	20	15	15	5	2	2	0	0	0	0	0
BAR	0	0	2	5	5	10	20	10	15	25	40	50	70	90	100	100	100	100
BOWLING ALLEY	0	0	40	40	40	30	20	25	30	30	20	20	50	80	90	80	40	10
CAR WASH	7	20	25	25	35	35	30	20	15	15	5	2	2	0	0	0	0	0
CONFERENCE	0	30	50	50	50	50	50	50	50	50	20	0	0	0	0	0	0	0
CONVENIENCE/GAS	10	10	15	20	30	50	50	50	40	50	60	60	60	70	60	30	20	10
DAY CARE	0	0	0	0	0	0	0	0	0	0	0	0	0	0	0	0	0	0
GOLF																		
-course	100	100	95	90	90	85	90	95	95	95	95	80	60	5	5	2	2	0
-driving range	40	90	100	95	50	100	60	50	50	40	70	90	90	80	40	10	2	0
-mini-golf	0	0	10	10	20	30	30	25	20	25	25	40	60	100	100	80	30	2
HOSPITAL																		
-patients/visits	0	0	50	100	90	50	30	30	30	30	40	80	100	100	60	20	10	10
-doctors/shift	100	100	70	60	70	70	60	60	60	80	80	50	50	40	30	25	20	20
-emp/shift	60	80	90	100	100	100	100	100	100	90	80	80	60	50	40	30	25	25
HOTEL/MOTEL	70	60	50	40	35	30	30	35	40	50	60	70	80	90	95	100	100	100
LODGE/CLUB	0	0	2	5	5	10	20	10	15	25	40	50	70	90	100	100	100	100
MANUFACTURING	5	25	50	50	45	40	40	35	30	25	20	10	5	2	0	0	0	0
MORTUARY	10	30	90	100	100	50	20	10	5	5	5	30	40	40	20	10	2	0
MUSEUM	3	10	30	45	73	85	95	100	100	90	75	65	60	55	40	38	13	0
OFFICE																		
-medical clinic	0	20	80	90	90	60	20	10	10	10	50	0	0	0	0	0	0	0
-general	7	20	25	25	35	35	30	20	15	15	5	2	2	0	0	0	0	0
-call center	20	20	30	30	40	40	50	50	50	50	40	30	10	10	5	5	5	5
POOL/BILLIARDS	0	0	5	10	15	20	20	25	25	35	40	50	60	100	100	100	50	20
RESTAURANT																		
-general	2	3	6	8	10	30	45	45	45	45	60	90	95	100	100	95	85	70
-drive-thru	2	3	6	8	10	30	45	45	45	45	60	90	95	100	100	95	85	70
-take-out	2	3	6	8	10	30	45	45	45	45	60	90	95	100	100	95	85	70
RESIDENTIAL																		
-bed & breakfast	100	100	50	20	10	10	10	10	15	25	50	60	80	90	100	100	100	100
-nursing home	20	25	50	50	50	50	50	50	50	50	50	30	20	20	20	20	20	20
-single family	95	88	81	74	71	71	70	71	73	75	81	85	87	92	95	96	98	100
-elderly apts.	100	90	85	80	70	70	70	70	70	75	85	90	95	95	100	100	100	100
-apartments	95	88	81	74	71	71	70	71	73	75	81	85	87	92	95	96	98	100
-fraternity/sorority	95	88	81	74	71	71	70	71	73	75	81	85	87	92	95	96	98	100
RETAIL	3	10	30	45	73	85	95	100	100	90	75	65	60	55	40	38	13	0
SCHOOL																		
-elementary/jr. high	2	5	10	15	10	10	15	10	10	5	2	2	0	0	0	0	0	0
-high school/college	0	5	40	40	20	10	30	30	30	20	10	5	5	5	2	0	0	0
STADIUM/ARENA	0	0	0	0	2	50	100	100	100	100	5	20	100	100	100	100	50	1
THEATER																		
-movie	0	0	0	0	0	30	70	70	70	70	70	80	90	100	100	100	80	70
-live performance	0	0	2	5	5	5	60	100	100	100	5	5	90	100	100	100	2	0
VIDEO ARCADE	0	0	20	30	40	60	70	70	90	90	100	100	100	100	100	90	50	10
WAREHOUSE/R&D	5	25	50	50	45	40	40	35	30	25	20	10	0	0	0	0	0	0
WORSHIP, PLACE OF	10	30	90	100	100	50	20	10	5	5	5	30	40	40	20	10	2	0

APPENDIX C

How to Measure Night-Time

Electronic Message Board Brightness Levels

The following procedures and standards are in accordance with "Recommended *Night-time Brightness Levels* for On-Premise Electronic Message Centers (EMC's)" published by the International Sign Association (April 2011). This method requires the use of an illuminance meter, which may also be referred to as a light, lux or footcandle meter and a tripod. The illuminance meter must have the ability to provide a reading up to two decimal places and must be set to read footcandles. The tripod ensures accurate readings.

STEP 1

Verify that the size and other features of the sign are consistent with the permit application including technology to ensure that the display brightness can be adjust according to ambient lighting conditions. Determine the square footage of the face of the electronic message board. Do not include the sign face square footage attributable to any additional static signs associated with the electronic message board (if applicable).

STEP 2

The night of the testing, ensure that the electronic message board is programmed to alternate between a solid white (or in the case of a monochrome display – the solid color of the display) message and a blank message. All other normal site lighting should be functioning.

STEP 3

Using the total square footage found in Step 1, look up the measurement distance in the following table to determine the distance to measure the brightness of the electronic message board. The distance should be measured perpendicular to the electronic message board sign face.

MEASUREMENT DISTANCE AS DETERMINED BY SIGN AREA *	
AREA OF ELECTRONIC MESSAGE BOARD (S.F.)	MEASUREMENT DISTANCE (FEET)
10	32
15	39
20	45
25	50
30	55
35	59
40	63
45	67
50	71
55	74
60	77
65	81
70	84
75	87
80	89
85	92
90	95
95	97
100	100

** For signs with an area in square feet other than those specifically listed in the table the measurement distance may be calculated with the following formula:*

Measurement Distance = √(Area of Sign Sq. Ft. x 100)

Step 4

Mount the sensor of your illuminance meter to the tripod and orient the sensor directly towards the face of the electronic message board at the measurement distance determined in Step 3. Set the illuminance meter to measure footcandles up to two decimal places. As the display alternates between a solid white message and an "off" message, note the range of values on the illuminance meter. If the difference between the readings is 0.3 footcandles or less, then the brightness of the display is in compliance. If not, the display will need to be adjusted to a lower brightness level using the manufacturer's recommended procedures.

APPENDIX D

Environmental Performance Standards Analysis Requirements

Reserved.